15th International Conference on Greenhouse Gas Control Technologies, GHGT-15

15th 18th March 2021 Abu Dhabi, UAE

Comparative analysis of the Oxyfuel and Calcium looping processes for low-carbon cement production

Edoardo De Lena[a], Francesco Magli[a], Maurizio Spinelli[b], Manuele Gatti[a,b], Marco Lindemann Lino[c], Volker Hoenig[c], Matteo C. Romano[a]*

[a]*Politecnico di Milano, Department of Energy, via Lambruschini 4, 20156 Milan, Italy*
[b]*Laboratorio Energia & Ambiente Piacenza (LEAP), via Nino Bixio 27/C, 29121 Piacenza, Italy*
[c] *VDZ Technology gGmbH, Toulouser Allee 71, 40476 Duesseldorf, Germany*

Abstract

In this work, the performance of a cement plant with the integrated calcium-looping (CaL) system being developed in the H2020 CLEANKER project are simulated and benchmarked against alternative CO_2 capture options, namely: (i) Tail-end CaL configuration (an end-of-pipe CaL option, with circulating fluidized bed reactors) (ii) Full Oxyfuel configuration (where both the pre-calciner and the rotary kiln are operated in oxy-combustion mode), and (iii) Partial Oxyfuel configuration (where only the pre-calciner is converted to oxy-combustion). Both CaL and oxyfuel options are integrated with a CO_2 purification unit (CPU). The analysis performed shows that CaL systems provide greater CO_2 reductions (both direct and indirect) than oxyfuel systems, but are subject to greater fuel consumption. The integrated CaL system shows better energy performance than the tail end CaL system (which is the most fuel consuming system) thanks to the presence of a single calciner. The full oxyfuel system shows the lowest SPECCA value among the systems studied but is penalized by the high electric energy demand. Finally, the partial oxyfuel system has lower electricity consumption than the full oxyfuel system, but it is the system with the highest CO_2 emissions.

Keywords: Ca-Looping; CCS; Oxyfuel; Partial Oxyfuel; Cement; CLEANKER

1. Introduction

Cement production is responsible for about 8% of the world's anthropogenic CO_2 emissions [1]. Being CO_2 emissions intrinsic to the clinker production process, the production of low-carbon cement relies on CCS. Most of the carbon capture technologies analysed and proposed so far are based on oxyfuel and post-combustion processes. A state-of-the-art cement plant has a specific CO_2 emission per ton of clinker produced of about 865 kg_{CO2}/t_{clk} [2], about 60% of which is associated with the calcination reaction ($CaCO_3 \rightarrow CaO+CO_2$). The CaO generated in the calcination process reacts with the other components of the raw meal, such as silica and alumina, to generate the constituents of clinker [2]. In a modern cement plant, about 90% of the calcination process takes place in a precalciner, while main clinker constituents are formed in the rotary kiln. Oxyfuel and Calcium looping (CaL) technologies are among the most promising technologies for CO_2 capture in cement plants. The CaL technology can be integrated in a cement kiln with two different configurations. The first, commonly proposed in the literature [3–7], is the tail-end CaL configuration, where the CO_2 capture system treats all the flue gas coming out of the preheating tower of the cement

* Corresponding author. *E-mail address:* matteo.romano@polimi.it

Electronic copy available at: https://ssrn.com/abstract=3811561

kiln. The second is the integrated CaL configuration, where the two reactors of the CaL system are integrated in the preheater of the cement plant and the carbonator treats only the flue gases leaving the rotary kiln [8]. As presented by De Lena et al [8], the integrated CaL configuration is preferable over the tail-end one from an energy point of view, thanks to the presence of a single calciner, which has the dual role of pre-calcining the solid materials entering the rotary kiln and regenerating the CO_2-sorbent used in the carbonator reactor. The aim of H2020 European project CLEANKER [9] is to demonstrate the technical feasibility of the integrated CaL configuration at TRL7 and to perform a techno-economic assessment of the process.

Oxyfuel technology is based on the idea of using pure oxygen instead of air as oxidant in the clinker burning process. The configuration most commonly proposed for this technology is the full-Oxyfuel configuration [10–12], where the combustion process is carried out with an oxidant flow composed mainly of O_2 and CO_2, in order to produce a flow rich in CO_2 that can be treated directly in the CO_2 purification unit (CPU). The aim of this work is to present a comparative technical assessment between different configurations of the Oxyfuel and CaL technologies for the production of low-carbon clinker.

Nomenclature

ASU	Air Separation Unit
CaL	Calcium Looping
CCS	Carbon Capture and Storage
CFB	Circulating Fluidized Bed reactor
CPU	CO_2 Purification Unit
EFR	Entrained Flow Reactor
IL	Integration Level
ORC	Organic Rankine Cycle
SPECCA	Specific Primary Energy Consumption for CO_2 Avoided

Subscripts

clk	Clinker
e	Electric
eq	Equivalent
LHV	Lower heating value
ref	Reference

2. Method

The methodology used in this work is in accordance with the framework of the H2020 CEMCAP project [13]. All configurations considered in this work (for both CaL and oxyfuel cases) are analyzed from an energy-environmental point of view, though process simulations performed by combining several tools. The mass and energy balances of the CO_2 capture systems integrated in cement kiln have been estimated by the proprietary code GS [14] developed by the GECOS group of the Department of Energy at Politecnico di Milano. Assumptions related to the clinker burning line have been defined according to the model developed by the German Cement Works Association VDZ for the European Cement Research Academy (ECRA) [12] and the IEA Greenhouse Gas R&D Programme [15].

The simulation of CaL reactors is performed by using dedicated 1D models developed in Matlab:

- The model used to estimate the CO_2 capture performances of the EFR carbonator was developed by Spinelli et al. [16];
- The CFB reactor model used to estimate the CO_2 capture efficiency of the carbonator of the tail-end CaL configuration was developed in Matlab by Romano in [17].

The simulation of the CPU is carried out in Aspen Plus [18], using the model developed by Magli et al. and described in CLEANKER deliverable D5.10 [19]. The heat recovery steam cycle parameters are defined according to the thermal power available, as discussed in the CEMCAP Framework [20].

Electronic copy available at: https://ssrn.com/abstract=3811561

The comparative analysis between the various technologies was made by comparing the following KPIs:

- *Direct primary energy consumption (q, MJ_{LHV}/t_{clk})* and *direct CO_2 emissions (e_{CO2}, kg_{CO2}/t_{clk})*, that indicate respectively the primary energy consumed through fuel combustion and the CO_2 directly emitted at the stack the cement plant per unit of clinker produced;
- *Indirect primary energy consumption (q_e, MJ_{LHV}/t_{clk})* and *indirect CO_2 emissions (e_{CO2}, kg_{CO2}/t_{clk})* that indicate respectively the primary energy consumption and the CO_2 emissions associated to the production the electricity used in the cement plant (P_e, MJ_e/t_{clk}) and are calculated according to the following equations:

$$q_e = \frac{P_e}{\eta_e} \qquad ; \qquad e_{CO2,e} = P_e \cdot e_e$$

where the net electric efficiency and the specific CO_2 emissions (η_e = 45.9%$_{LHV}$; e_e = 262 kg_{CO2}/MWh_e) are selected to represent the reference scenario for electricity generation, according to the average EU-28 non-CHP energy mix of year 2015;

- *Equivalent primary energy consumption (q_{eq}, MJ_{LHV}/t_{clk}) and equivalent CO_2 emissions (e_{CO2}, kg_{CO2}/t_{clk})*, obtained by summing the direct and indirect contributions;
- *Specific Primary Energy Consumption for CO_2 Avoided (SPECCA)* [MJ_{LHV}/kg_{CO2}], which indicates the additional equivalent primary energy used to avoid a unit equivalent CO_2 with respect to the reference cement plant without a CO_2 capture system (*ref*):

$$SPECCA = \frac{q_{eq} - q_{eq\,ref}}{e_{CO2,eq\,ref} - e_{CO2,eq}}$$

3. Plants description

3.1. Reference cement plant

The reference cement plant without CO_2 capture relies on the Best Available Technique (BAT) standard as defined in the European BREF-Document (Best Available Technique Reference) for the manufacture of cement [21] based on dry process configuration with a clinker production of about 3000 tpd. For a more accurate description the reader is addressed to the following articles [2,7].

3.2. Integrated Cal Configuration

The integrated CaL configuration (presented in Fig. 1) is based on two interconnected entrained flow reactors, using raw meal as CO_2 sorbent instead of pure limestone. For a comprehensive description of the process, the reader is addressed to [8].

Electronic copy available at: https://ssrn.com/abstract=3811561

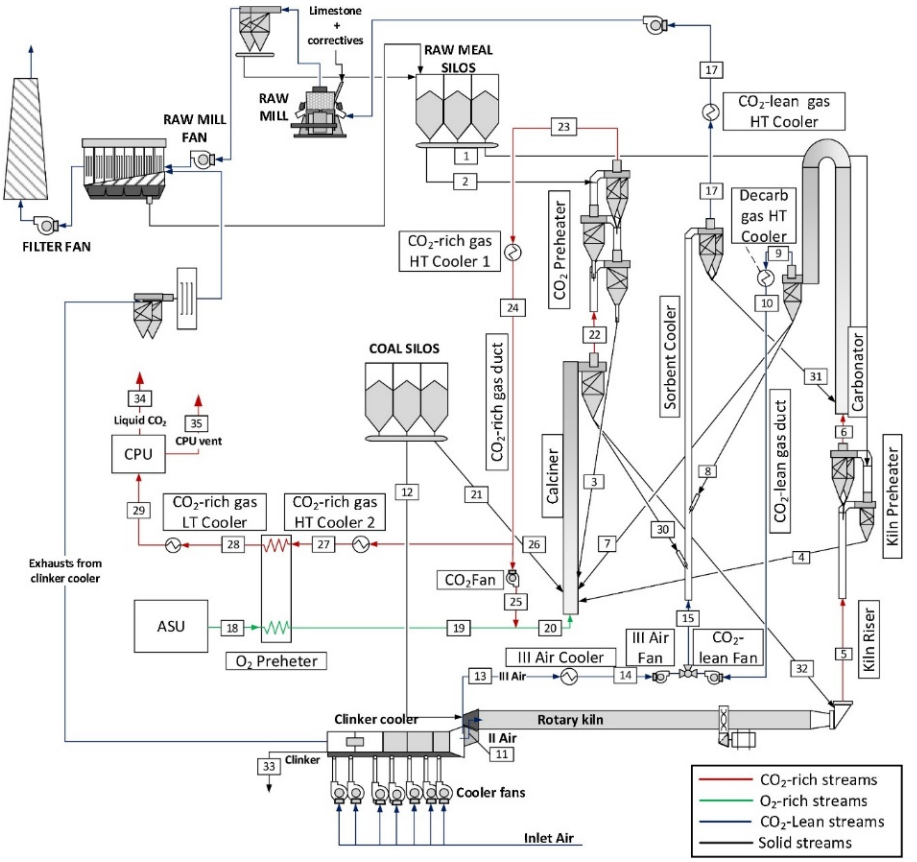

Fig. 1 Schematic of the integrated CaL cement kiln

In this configuration the carbonator is an adiabatic, 120m-long refractory lined gooseneck reactor, fed with the flue gas leaving the rotary kiln (stream #5). The carbonator inlet temperature is controlled by cooling the recirculated solids in the sorbent cooler (#8). About 80% of the inlet CO_2 is captured in the carbonator. The flue gas from the rotary kiln is cooled in a two-stage raw meal preheater before entering the carbonator. The amount of raw meal fed to this preheater is tuned to achieve a gas temperature at preheater outlet and carbonator inlet (#6) equal to 434 °C, which allows achieving the target adiabatic mixing temperature of 600 °C of the solid-gas mixture at the carbonator inlet. The oxyfuel calciner represents both the cement kiln pre-calciner and the calciner of the CaL system, and it works under higher CO_2 partial pressure with respect to the reference air-fired pre-calciner. To ensure a calcination degree comparable with conventional air-fired calciners, an operating temperature of 920°C has been assumed. The oxyfuel calciner is fired with coal (#21) and a 30%vol. O_2 stream, obtained by mixing 95% pure O_2 from the ASU (#19) and a fraction of the calciner off-gas (#25), which is cooled to a temperature of 400 °C and then recirculated to the calciner inlet. Combustion provides the heat required for heating and calcining both the recarbonated sorbent (#7) and the preheated raw meal, which comes partly from the two-stage preheater (#4) and partly from a three-stage preheater (#3) using CO_2-rich calciner off-gas at 920 °C (#22) as heat source. A fraction of the calcined raw meal (42%) is sent to the rotary kiln (#32), partly (53%) sent to the carbonator after cooling in the sorbent cooler (#30) and partly (5%) entrained with the CO_2-rich gas from the calciner. The rotary kiln working condition is very similar to the baseline operation without CO_2 capture: the main burner remains in air-blown combustion mode, and the variation of the composition of the calcined raw meal fed to the rotary kiln is not significant. The heat available from the CO_2-rich stream, the III air and the CO_2-lean gas leaving the carbonator, is recovered and used for electricity generation in a steam cycle.

Electronic copy available at: https://ssrn.com/abstract=3811561

4. Alternative CO_2 capture processes

The CO_2 capture technologies chosen for the comparison are: (i) Tail-end CaL configuration, an end-of-pipe CaL option with circulating fluidized bed reactors, (ii) Full Oxyfuel configuration, where both the pre-calciner and the rotary kiln are operated in oxy-combustion mode, and (iii) Partial Oxyfuel configuration, where only the pre-calciner is converted to oxy-combustion. These technologies are analyzed from an energy and environmental perspective as discussed in section 2. A brief description of these processes is given below.

4.1. Tail-end CaL

In the Tail-end configuration (Fig. 2), the flue gas from the cement kiln is sent to the CaL system, which is then built in the cement kiln line as an end-of-pipe system. For a comprehensive description of the process, the reader is addressed to [7].

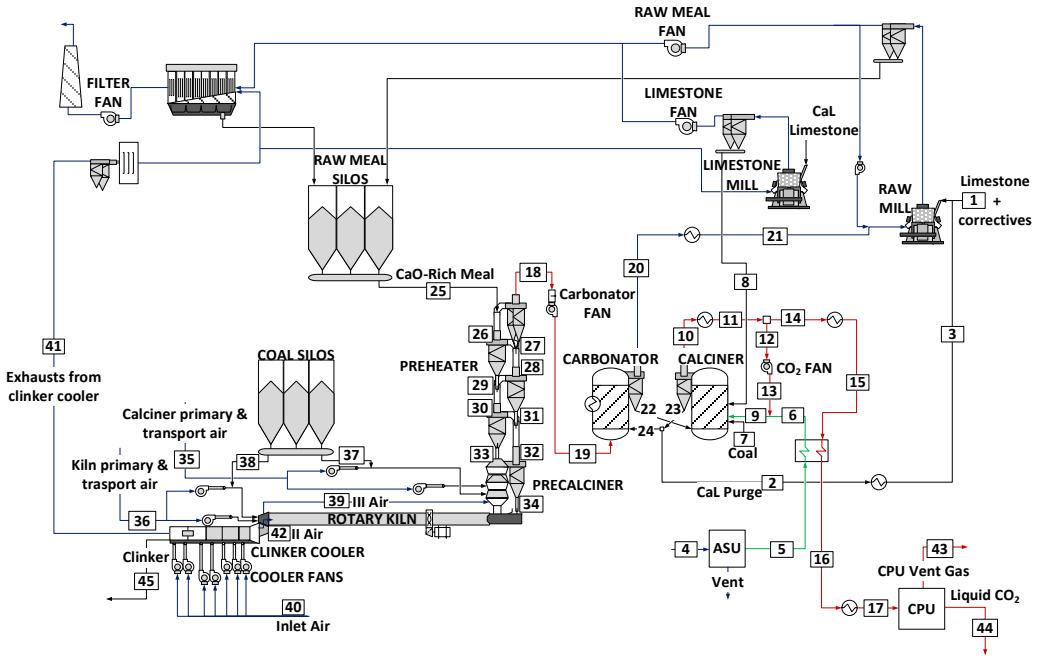

Fig. 2 Schematic of the cement kiln with Tail End CaL capture system

One of the advantages of the CaL technology is that most of the energy introduced into the calciner for regenerating the sorbent can be recovered at high temperature in the cooled carbonator and efficiently converted into electricity.

The gas leaving the preheater tower at about 330°C (stream #18) is treated in the carbonator of the CaL system, where about 90% of the CO_2 contained in the flue gas is removed. A fraction of the limestone fed to the cement kiln is introduced in the calciner of the CaL process to be used as a CO_2-sorbent. The CaO-rich solid purge from the CaL process is then introduced into the clinker burning line for replacing part of the limestone in the raw meal. The Integration Level (IL) is therefore defined as the percentage of Ca entering the clinker burning process with the CaL purge with respect to the total Ca fed to the plant.

The CO_2-lean gas leaving the carbonator (#20) exits at 650°C and is cooled to a temperature of about 430°C (#21) before its use in the raw mill for drying purposes. The carbonator works at the typical temperature of 650°C [22] and the solids exiting this reactor (#22) are sent to the CFB calciner, where oxy-combustion of coal is carried out to convert the $CaCO_3$ formed in the carbonator back to CaO. To ensure complete calcination, a calciner outlet temperature of 920°C is assumed. The ASU produces 95% pure oxygen to be used as oxidant in the CaL calciner. A CO_2 recycle (#13) acts as temperature moderator, by reducing O_2 concentration in the oxidant stream at calciner inlet down to 50%

Electronic copy available at: https://ssrn.com/abstract=3811561

on molar basis. The CO_2-rich stream generated in the CaL calciner is fed to the CPU. CaL limestone make-up flow (#8) is introduced though a dedicated limestone mill. The make-up flow rate is defined through the ratio F_0/F_{CO2}, which indicates the molar flow rate of fresh $CaCO_3$ introduced into the CaL system per mole of CO_2 entering the carbonator with the flue gas. The amount of $CaCO_3$ introduced in the calciner is ultimately extracted as CaO in the CaL purge (#2), cooled to 80°C (#3) and sent to the raw mill where it is further ground together with additional limestone and correctives (#1) to produce the raw meal (#25). In the cement kiln integrated with the Tail-End CaL process, the mass flow rate and composition of the material from the pre-calciner fed to the rotary kiln are kept unchanged with respect to the reference case without CO_2 capture.

4.2. Full Oxyfuel

In the full oxyfuel configuration (Fig. 3), the burning line process is carried out with an oxidant mainly composed of oxygen and CO_2, in order to produce a CO_2-rich stream that can be treated directly in the CPU.

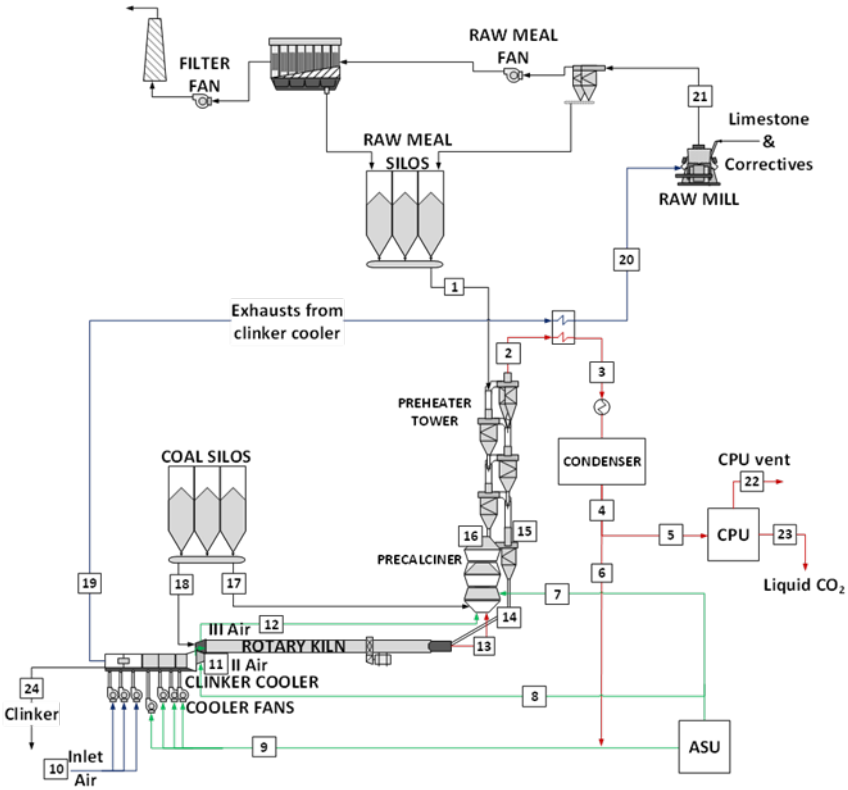

Fig. 3 Schematic of the full oxyfuel configuration

Theoretically, in the full oxyfuel configuration the entire amount of CO_2 generated from the calcination and combustion can be captured, depending exclusively on the performance of the CPU. Thus, the equivalent CO_2 emissions can theoretically be reduced to levels close to zero if electricity is generated from renewable sources.

Many of the key components existing in the reference cement plant (conventional process) can be used in the full oxyfuel configuration and do not require any major modifications in retrofitting projects. The only exception is the clinker cooler of which several new designs have been proposed so far [12,23]. In the configuration analyzed in this work, the clinker cooler is assumed to consist of two distinct zones: a high temperature zone, working with a mixture of 95%vol. pure O_2 from the ASU and recirculated CO_2-rich gas; and a low temperature zone working with air and cooling the hot clinker from 792°C to 115°C. To ensure a proper calcination degree, an exit temperature from the oxy-fuel pre-calciner (#14 and #15) of 920°C was assumed. The rotary kiln has been simulated by assuming the same

Electronic copy available at: https://ssrn.com/abstract=3811561

volumetric flow rate (i.e. the same gas velocity) at the kiln cold end of the reference case (#13). The recirculated CO_2-rich stream (#6) is set to ensure the same gas velocity at oxy-fuel pre-calciner outlet (#15) with respect to the reference cement kiln.

The temperature of the gases exiting the rotary kiln is kept unchanged with respect to the reference case. Part of the heat available from the CO_2-rich gas leaving the preheater is used to heat up the air coming from the clinker cooler This stream of air at about 375°C is used for drying the raw meal in the mill. The remaining part of the available heat of CO_2-rich stream is used to generate electricity with an Organic Rankine Cycle (ORC).

4.3. Partial Oxyfuel

The partial oxyfuel configuration (Fig. 4) has been assessed both experimentally and through modelling in Lafarge and IEA projects [24,25].

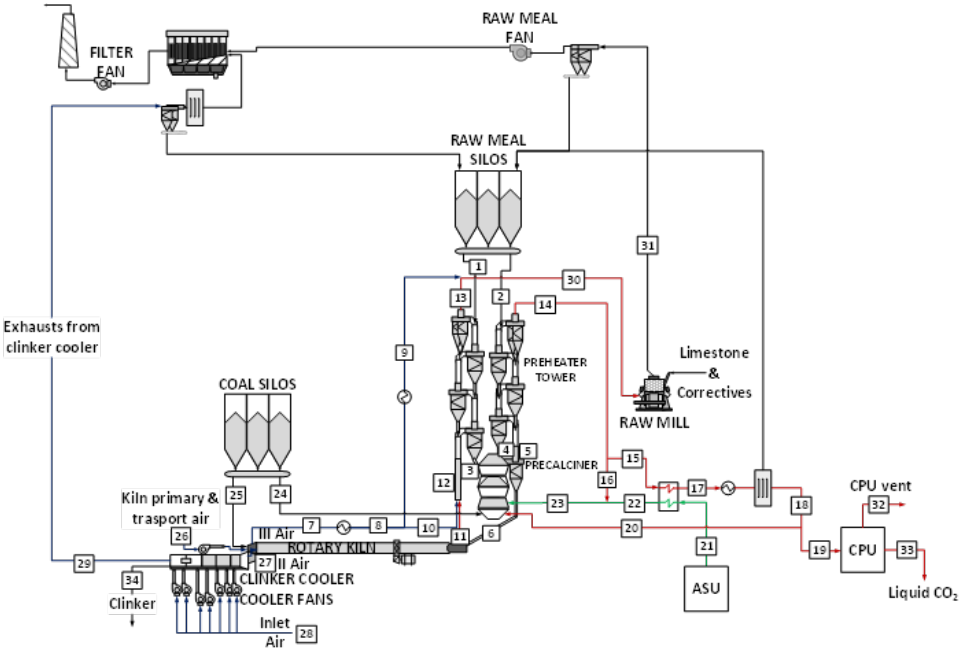

Fig. 4 Schematic of cement kiln in partial oxyfuel configuration

This configuration is inspired by the idea that about 80% of the total CO_2 generated in the cement production process comes from the pre-calciner, which is the only reactor converted to oxyfuel operation in this configuration. Compared to conventional operation, the reactor works with a higher CO_2 partial pressure. In order to keep the calcination degree, the operating temperature is raised up to 920°C. The oxygen needed for the combustion process is supplied by the ASU. The rotary kiln and the clinker cooler work as in reference cement plant.

The CO_2-rich gas leaving the pre-calciner is used in one of the strings of the preheater to heat the raw meal entering the pre-calciner. III air is first cooled down to 760°C, 45% of its mass flow rate (#10) is mixed with the kiln off-gas at 1078.5°C (#11) and sent to the first string of the preheater to heat the raw meal to 800°C (#3). The remaining portion of the III air is further cooled down to 652°C (#9), mixed with the gas at 292°C coming out of the first string of the preheater (#13) and finally sent to the mill (#30).

Exhaust gas leaving the pre-calciner at 920°C (#5) is used to heat the remaining part of the raw meal to 850°C in the second string of the preheater tower. Part of the CO_2-rich stream exiting the preheater tower at 403°C is recirculated in the pre-calciner (#15), in order to ensures a proper gas velocity inside the reactor and along the preheater. The remaining gas fraction is further cooled and sent to the CPU. As for the CaL technologies, also in this case, the rotary kiln works in the same operating conditions of the reference case.

Electronic copy available at: https://ssrn.com/abstract=3811561

5. Comparative analysis

5.1. Direct, Indirect and equivalent primary energy consumption

In all the configurations here envisaged, the *direct fuel consumption* increases, in particular:

- in full and partial oxyfuel configurations, the fuel burned in the cement kiln increases of +3% and +19% respectively. The primary energy consumption of the partial oxyfuel configuration is higher than presented in the ECRA study [12] because in this work all the configurations have been studied and compared for retrofit cases, while the ECRA partial oxyfuel configuration has been developed with the aim of maximizing the energy efficiency of the system, leading to different assumptions and plant configurations. As an example, in the present work the oxyfuel calciner has been simulated by tuning the CO_2 recirculation rate in order to keep the gas volume flow at reactor outlet unchanged with respect to its baseline operation, whereas the ECRA study envisages different gas volumes and a new design of risers and cyclones. In addition, O_2 input has been tuned to meet a concentration of 5%vol at calciner outlet, whereas the ECRA case features a lower oxygen content (3.2%vol). Finally, some differences are related to the assessment of the heat recovery sections: for instance, tertiary air is partially used in the preheating tower and partially exploited in the heat recovery section of the bottom cycle, whereas in the ECRA configuration this hot stream is entirely exploited to preheat the CO_2 recycle via a gas-gas heat exchanger. Due to these differences the overall energy consumption here presented is higher than what calculated for the optimized ECRA configuration.
- in the integrated CaL configuration, the direct fuel consumption increases by 67%, due to the dual role of the CaL calciner: (i) the production of the calcined material to be fed into the rotary kiln and (ii) the sorbent regeneration, which requires also to heat up the carbonated solids from 670°C to 920°C ;
- in the tail end configuration, the fuel input increase is about 170% and 119% in 20%-IL and 50%-IL respectively. The main reason is related to the double calcination-step needed for the capture of the CO_2 from the limestone fed into the pre-calciner: indeed, CO_2 released in the pre-calciner by the raw meal calcination is converted to $CaCO_3$ in the carbonator of the CaL process, which is calcined again in the oxyfuel calciner.

On the other hand, the higher direct fuel consumption, the higher the power generated and consequently the lower the *indirect primary energy consumption* (q_e), as depicted in Fig. 5:

- the tail end CaL 20%-IL configuration shows the lowest q_e (-0.82 MJ_{LHV}/kg_{clk}). This value is negative as the cement plant is a net exporter of carbon-free electricity;
- in the tail end CaL 50%-IL and integrated CaL configurations there is a moderate variation of the electricity consumption, by approximately -53% and +35% of the reference cement plant.
- in both the full and partial oxyfuel configurations, the power generated in the bottoming cycle is much lower than the electric consumption of the ASU and CPU. As reported breakdown of Fig. 6, the power generated in the oxyfuel configurations can only cover 10.0% (full oxyfuel) and 21.8% (partial oxyfuel) of the additional power demand, causing a significant increase of the indirect primary energy consumption and CO_2 emissions.

Finally, the combination of the direct fuel consumption and indirect primary energy consumption results in a moderate increase in *equivalent primary energy consumption* in full oxyfuel (+31.0%) and in partial oxyfuel (+41.3%) configurations. A more significant increase in equivalent primary energy consumption can be seen in the integrated CaL (+59.7%) and tail end CaL (+84.9% and +77.7% in 20%-IL and 50%-IL respectively) configurations.

Electronic copy available at: https://ssrn.com/abstract=3811561

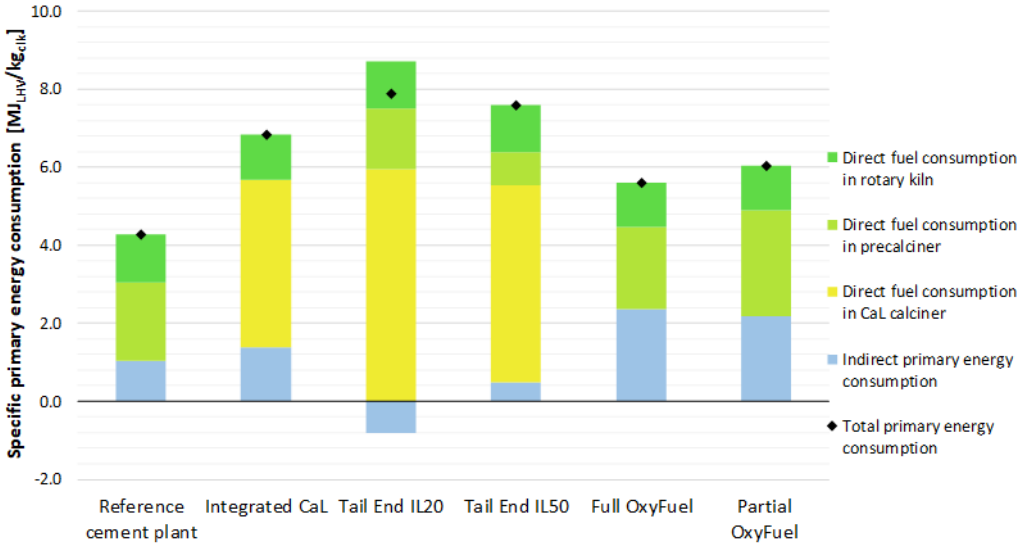

Fig. 5 Break-down of equivalent primary energy consumption of the different configurations

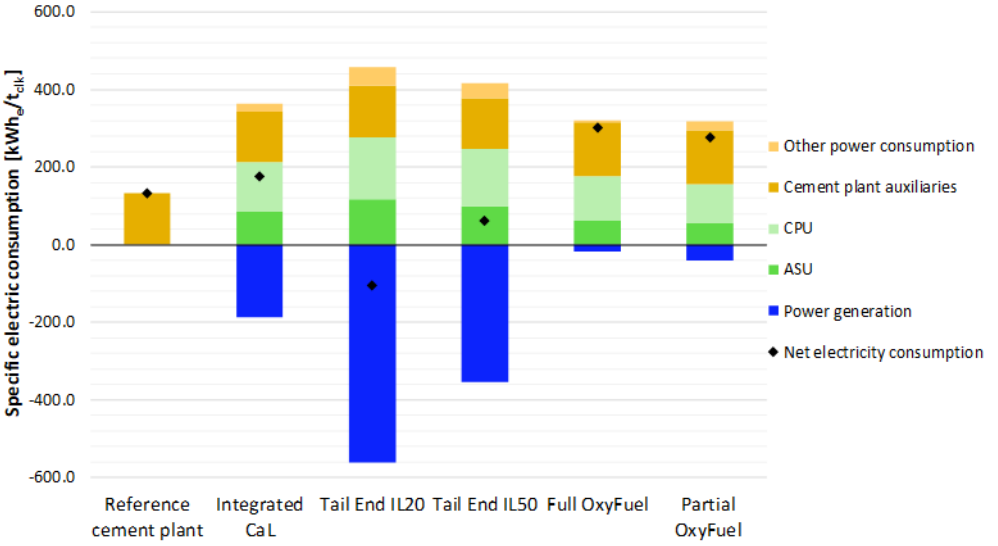

Fig. 6 Break-down of electric consumption of the different configurations

5.2. Direct, Indirect and equivalent CO_2 Emissions

Fig. 7 shows the specific CO_2 emissions of all the configurations. Simulation results show that:

- the integrated CaL configuration achieves the lowest direct CO_2 emissions and, therefore, the highest value of the direct CO_2 emission reduction (94.2%).
- the partial oxyfuel configuration achieves the highest direct CO_2 emissions (corresponding to a reduction of about 79%), because only the CO_2 generated by calcination and combustion in the pre-calciner is sent to the CPU and to storage /utilization, whereas the CO_2 generated in the rotary kiln is emitted.
- the full oxyfuel configuration features a direct CO_2 emission reduction of about 92%, as all the CO_2 generated in the process is sent to the CPU and all the residual emission is attributable to the CPU vent gas.

Electronic copy available at: https://ssrn.com/abstract=3811561

- in the tail end CaL, the carbonator treats the entire CO_2 generated by the clinker production process. Since part of the limestone is replaced with lime from the purge of the CaL system, the reduction of CO_2 emissions at the stack is greater than the carbonator capture efficiency. The tail end CaL 50%-IL achieves a direct emission reduction of 91.2%, while, in the tail end CaL 20%-IL, the CO_2 from the CPU vent gas adversely affects the direct emission reduction, which is equal to 87.1%.

The indirect CO_2 emissions are associated with the indirect primary energy consumption in the system and therefore the same considerations as above apply.

As a result, all the CaL configurations, achieve equivalent emission reduction of about 90%. Only the tail end CaL 20%-IL results in a greater equivalent emission reduction than the direct emission reduction, thanks to the net electricity generated. The equivalent emission reductions for all other configurations are negatively affected by indirect emissions. The indirect CO_2 emissions represent about 53%, 48%, 29% and 17% of the equivalent CO_2 emissions for the full oxyfuel, integrated CaL, partial oxyfuel and tail end CaL 50%-IL respectively.

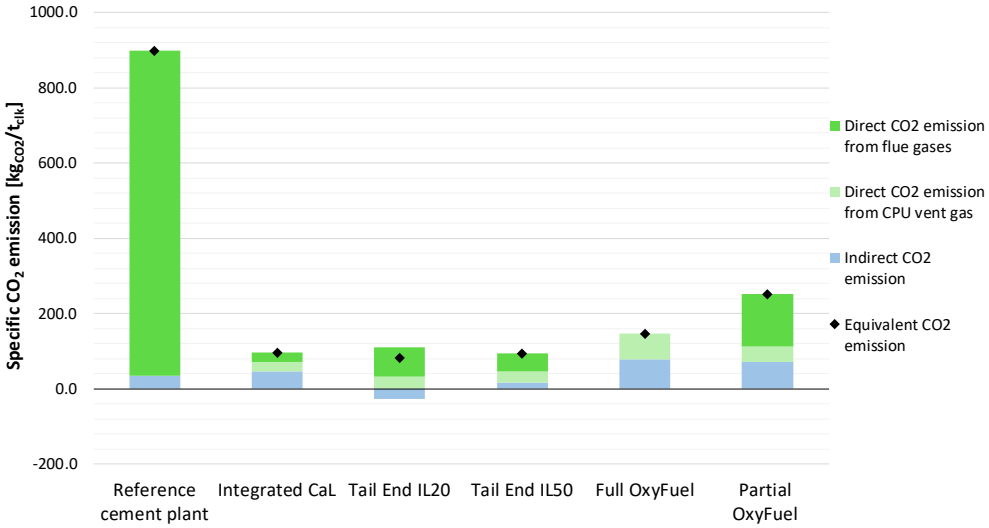

Fig. 7 Break-down of equivalent CO_2 emission of the different configurations analyzed

5.3. SPECCA

Fig. 8 summarizes the resulting SPECCA index of the different configurations, as well as its breakdown into the main contributions.

The full oxyfuel configuration achieves the lowest SPECCA among the considered options, thanks to a high reduction of the direct CO_2 emissions, even if the large amount of electricity required for the process negatively affects the equivalent primary energy consumption and the equivalent CO_2 emissions. On the contrary, the highest SPECCA is achieved for the Tail End configuration, due to the high fuel consumption in the CaL calciner.

Electronic copy available at: https://ssrn.com/abstract=3811561

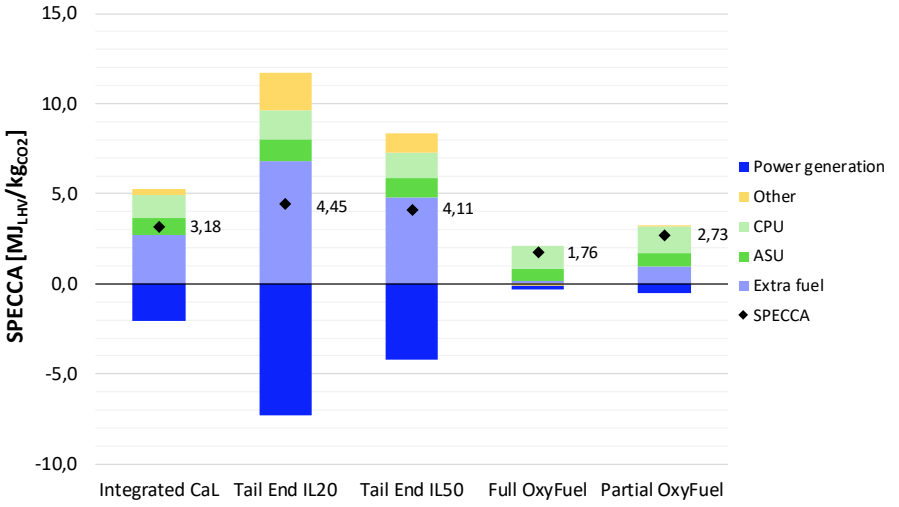

Fig. 8 Break-down of SPECCA of the different configurations analysed

The most important contributions to the SPECCA differ among the configurations:

- For the integrated CaL configuration the main contribution is related to the increase in fuel consumption in the oxy-calciner. The electricity generated is not enough to sustain the total power demand of the system and a reduction in equivalent CO_2 avoided is achieved.
- For the tail end CaL configuration, the main contribution is related to the large amount of fuel consumption in the system. Depending on the IL, it is possible to obtain a positive net electricity generation, which contributes to reduce both added equivalent primary energy consumption and equivalent CO_2 emissions.
- For the full oxyfuel configuration, the added equivalent primary energy consumption and the reduction in equivalent CO_2 avoided are almost entirely due to the increase in electric power consumption.
- For the partial oxyfuel configuration the added equivalent primary energy consumption and the reduction in equivalent CO_2 avoided are related to the increase in the total fuel consumption and the total power demand of the system.

Acknowledgements

This project has received funding from the European Union's Horizon 2020 research and innovation programme under the grant agreement no 764816 (CLEANKER).

References

[1] Olivier JGJ, Janssens-Maenhout G, Muntean M, Peters JAHW. Trends in Global CO2 Emissions: 2016 Report. 2016.

[2] Campanari S, Cinti G, Consonni S, Fleiger K, Gatti M, Hoppe H, et al. Design and performance of CEMCAP cement plant without CO2 capture (D4.1) 2016. https://doi.org/10.5281/ZENODO.1001664.

[3] Atsonios K, Grammelis P, Antiohos SK, Nikolopoulos N, Kakaras E. Integration of calcium looping technology in existing cement plant for CO2 capture: Process modeling and technical considerations. Fuel 2015;153:210–23. https://doi.org/10.1016/j.fuel.2015.02.084.

[4] Martínez Vera ER. Method for capturing CO2 produced by cement plants by using the calcium cycle. US 2009/0255444 A1, 2009.

[5] Ozcan DC, Ahn H, Brandani S. Process integration of a Ca-looping carbon capture process in a cement plant. Int J Greenh Gas Control 2013;19:530–40. https://doi.org/10.1016/j.ijggc.2013.10.009.

[6] Spinelli M, Martínez I, De Lena E, Cinti G, Hornberger M, Spörl R, et al. Integration of Ca-Looping Systems

Electronic copy available at: https://ssrn.com/abstract=3811561

for CO2 Capture in Cement Plants. Energy Procedia 2017;114:6206–14. https://doi.org/10.1016/j.egypro.2017.03.1758.

[7] De Lena E, Spinelli M, Martínez I, Gatti M, Scaccabarozzi R, Cinti G, et al. Process integration study of tail-end Ca-Looping process for CO2capture in cement plants. Int J Greenh Gas Control 2017;67:71–92. https://doi.org/10.1016/j.ijggc.2017.10.005.

[8] Lena E De, Spinelli M, Gatti M, Scaccabarozzi R, Campanari S, Consonni S, et al. Techno-economic analysis of calcium looping processes for low CO2 emission cement plants. Int J Greenh Gas Control 2019;82:244–60. https://doi.org/10.1016/j.ijggc.2019.01.005.

[9] "CLEANKER project website." [Online]. Available: http://www.cleanker.eu 2017.

[10] Carrasco-Maldonado F, Spörl R, Fleiger K, Hoenig V, Maier J, Scheffknecht G. Oxy-fuel combustion technology for cement production - State of the art research and technology development. Int J Greenh Gas Control 2016. https://doi.org/10.1016/j.ijggc.2015.12.014.

[11] Zeman F. Oxygen combustion in cement production. Energy Procedia, 2009. https://doi.org/10.1016/j.egypro.2009.01.027.

[12] Hoenig V, Hoppe H, Koring K, Lemke J. ECRA CCS Proect- Report on Phase III 2012:107.

[13] Anantharaman R, Berstad D, Cinti G, De Lena E, Gatti M, Hoppe H, et al. CEMCAP framework for comparative techno-economic analysis of CO2 capture from cement plants - D3.2 2018. https://doi.org/10.5281/ZENODO.1257112.

[14] GECOS. GS software. www.gecos.polimi.it 2016.

[15] IEAGHG. Deployment of CCS in the Cement Industry. Rep 2013/19 2013:139.

[16] Spinelli M, Martínez I, Romano MC. One-dimensional model of entrained-flow carbonator for CO2capture in cement kilns by Calcium looping process. Chem Eng Sci 2018;191:100–14. https://doi.org/10.1016/j.ces.2018.06.051.

[17] Romano MC. Modeling the carbonator of a Ca-looping process for CO2capture from power plant flue gas. Chem Eng Sci 2012;69:257–69. https://doi.org/10.1016/j.ces.2011.10.041.

[18] aspentech. ASPEN Plus n.d.

[19] Magli F, Gatti M, Spinelli M, Romano MC. D5.10 - Configuration and preliminary performance of the CPU for two different CO2 target purities 2019.

[20] Anantharaman R, Berstad D, Cinti G, De Lena E, Gatti M, Gazzani M, et al. CEMCAP framework for comparative techno-economic analysis of CO2 capture from cement plants. CEMCAP deliverable D3.2. www.sintef.no/projectweb/cemcap/results/ 2018.

[21] Schorcht F, Kourti I, Scalet BM, Roudier S, Sancho LD. Best Available Techniques (BAT) Reference Document for the Production of Cement, Lime and Magnesium Oxide. 2013. https://doi.org/10.2788/12850.

[22] Martínez I, Grasa G, Parkkinen J, Tynjälä T, Hyppänen T, Murillo R, et al. Review and research needs of Ca-Looping systems modelling for post-combustion CO2 capture applications. Int J Greenh Gas Control 2016;50:271–304. https://doi.org/10.1016/j.ijggc.2016.04.002.

[23] Lino ML. D9.2 CEMCAP Analysis of oxyfuel clinker cooler operational performance 2018.

[24] Gimenez M, Paxton C, Cement L, Wassard H, Mogensen O, Paubel X, et al. The oxycombustion option. Int Cem Rev 2014;37:37–43.

[25] International Energy Agency. Carbon Dioxide Capture in the Cement Industry 2008:1–180.

Electronic copy available at: https://ssrn.com/abstract=3811561