CO_2 – tolerant cryogenic nitrogen rejection schemes: analysis of their performances

Elvira Spatolisano, Laura A. Pellegrini

Dipartimento di Chimica, Materiali e Ingegneria Chimica "G. Natta", Politecnico di Milano, Piazza Leonardo da Vinci 32, 20133 Milano, Italy

Corresponding author: Elvira Spatolisano (elvira.spatolisano@polimi.it; phone: +39 02 2399 3207; fax: +39 02 2399 3280)

Abstract

Natural gas growing importance in the current energy scenario, which has entailed the continuous rising in global natural gas demand, has led to a re-evaluation of the potential of unconventional, stranded and contaminated gas reserves that were previously considered economically unviable. Among them, nitrogen rich natural gas feedstocks, that in the past were thought to be a not so interesting methane source, are now becoming a considerable fraction of the total treated gas. For this kind of low-quality gases, nitrogen removal is necessary to lower the inert content and to produce a pipeline-quality gas or LNG.

Considering the available nitrogen removal technologies, cryogenic nitrogen rejection is nowadays the leading one for large-scale applications, with capacities exceeding 0.5 million standard cubic meters per day (MSCMD), being very flexible regarding the inlet N_2 content.

Depending on the feed composition, different Nitrogen Rejection Units (NRU) (i.e., the single-column, the double-column, and the three-column systems) are available for treating inlet gas mixtures.

The aim of the present work is to evaluate the performances of different cryogenic nitrogen rejection schemes through energy and exergy analysis. Specifically, single column and three column nitrogen rejection schemes have been considered with various natural gas feed composition, focusing on the range where different nitrogen removal schemes are applicable.

The net equivalent methane analysis accounts for the amount of methane required to supply the overall process energy demands through specific processes assumed as reference. On the other hand,

exergy analysis evaluates the exergy efficiency of each process scheme through a thermodynamically rigorous approach, converting energy and material flows into their exergy equivalents.
Results prove that the three column process scheme reaches the highest thermodynamic performances, resulting in the best values of exergy efficiency and equivalent methane requirements with respect to the other configurations. This is mainly due to the lower prefractionation column condenser duty, resulting in a less irreversible heat exchanging process.

Keywords: Nitrogen Rejection Unit; Natural Gas; Carbon Dioxide; Cryogenic Separation; Energy analysis; Exergy analysis

1. Introduction

The energy sector is currently in the midst of a profound change where technology is revolutionizing the way energy is produced, distributed and consumed.

Global, European and national institutions are aware of this deep change and set targets going in the direction of decarbonizing the energy sector. At the international level, the ambitious target established by the COP21 in Paris is setting in motion policy makers worldwide, who are working on policies and measures able to "hold the increase in the global average temperature to well below 2 °C above pre-industrial levels", pursuing efforts to limit the temperature increase to 1.5 °C[1].

As the energy sector accounts for nearly 90% of CO_2 emissions globally, it is the dominant contributor to climate change. For this reason, the world is experiencing a profound energy transition, shifting from an energy system based on fossil fuels, to one based on renewable energy.

The Sustainable Development Scenario projected by the International Energy Agency (IEA)[2] maps out a way to meet sustainable energy goals in full, requiring rapid and widespread changes across all parts of the energy system.

According to the International Energy Agency's forecasts, natural gas consumption will increase over the next decade at an annual average rate of 0.9% before reaching a high point by the end of the 2020s. It is the only source of energy, along with renewables, whose share in primary energy increases over the presented scenario.

The rising in global request for natural gas, together with the abundance of unconventional and low-quality reserves, has led to the development of new exploration and production technologies, that allow to benefit from fields previously considered economically unviable.

Such low-quality natural gas contains significant concentrations of gas other than methane. These non-hydrocarbons are predominantly nitrogen, carbon dioxide, and hydrogen sulfide, but may also include other gaseous components.

Among this so-called subquality natural gas reserves, nitrogen rich gases, that in the past were thought to be a not so interesting methane source, are now becoming a considerable fraction of the total treated gas. For this kind of low-quality natural gas, deep and technologically challenging purification treatments are necessary to meet sales gas specifications. As subquality fields are exploited, the need for better natural gas upgrading processes is increasing.

Several techniques have been proposed such as cryogenic distillation, membranes, adsorption and absorption. Nevertheless, cryogenic distillation remains the leading technology for large-scale plants with capacities exceeding 0.5 million standard cubic meters per day (MSCMD), capable of reducing nitrogen to less than 1% mol and being very flexible regarding the inlet nitrogen content[3,4].

Considering cryogenic distillation, different process configurations are available to achieve nitrogen - methane separation, producing pipeline quality natural gas.

In this context, the aim of this work is to evaluate the performances of different cryogenic nitrogen rejection schemes, comparing them through energy and exergy analyses.

2. Cryogenic nitrogen rejection

Cryogenic nitrogen rejection process consists in a distillation, where nitrogen and methane are separated exploiting their different volatility. Due to the very low boiling points of the two species, the cryogenic distillation is limited in tolerating impurities in the incoming natural gas feed. Feed gas has to contain mainly methane and nitrogen; very low quantities of higher hydrocarbons and carbon dioxide are allowed, with the most stringent limit due to the freezing point of the mixture.

Generally, carbon dioxide tolerance is determined by the coldest spot where carbon dioxide tends to freeze. Since the maximum solubility of carbon dioxide depends in essence on the temperature of the solvent, processes at elevated pressure (typically above 20 bar) are more carbon dioxide-tolerant than those operated at low pressure.

The main drawback of this process is the high energy demand because of the low temperatures are required to fractionate nitrogen and methane mixtures.

Various process configurations can be realized and were simulated in Aspen HYSYS® V9.0[6]: single column process, reported in Figure 1, double column process, reported in Figure 2 and three column process, reported in Figure 3.

A description of these schemes is reported in the following: the details about process simulations are reported elsewhere[5].

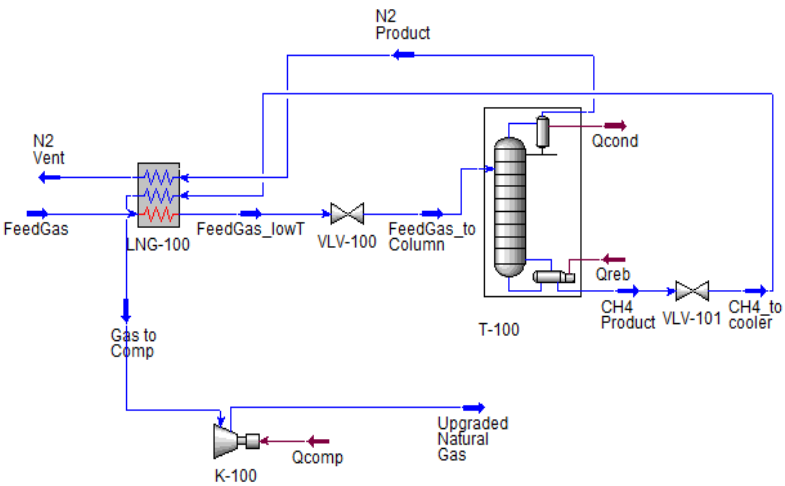

Figure 1. Single Column process scheme simulated in Aspen HYSYS® V9.0.

The single column process is typically applied when nitrogen content in the feed gas is below 30% mol.

The feed stream, *FeedGas*, after precooling in *LNG-100* against the top and bottom column products, is expanded in *VLV-100* and then sent to the distillation column *T-100*. The column is equipped with a partial reboiler and partial condenser, producing a methane bottom liquid stream *CH4 Product* and a nitrogen top vapor *N2 Product*. The bottom product meets sales gas specifications and is suitable, after compression in *K-100*, to be sent to pipelines, while nitrogen top product can be either vented or reinjected into wells for Enhanced Oil Recovery (EOR).

The distillation operating pressure is in the range of 21-28 bar, with the process being not viable as the nitrogen critical pressure is approached (about 34 bar).

As the nitrogen content increases, the condensation duty increases, too, and the single column configuration stops being the most advantageous separation solution.

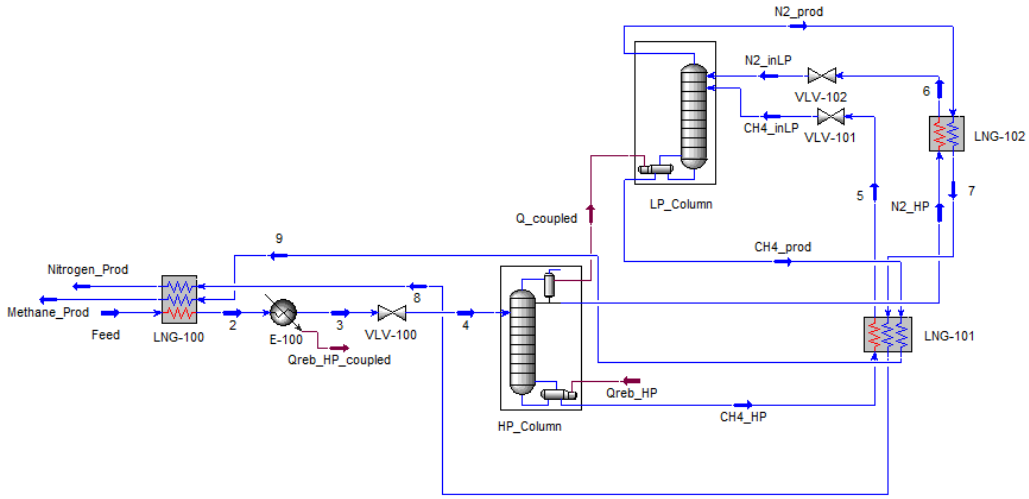

Figure 2. Double Column process scheme simulated in Aspen HYSYS V9.0.

The double column is the preferred choice for nitrogen concentrations in the inlet feed above 30% mol.

The double column process scheme employs two thermally coupled distillation columns, *HP_Column*, working at high pressure and *LP_Column*, working at low pressure. The pressure in the columns is set in such a way that there is an acceptable temperature difference between the thermally linked reboiling and condensing fluids; the high pressure column operates typically at 10-25 bar, while the low pressure one at approximately 1.5 bar.

The feed gas, *Feed*, is first precooled against the two product streams in *LNG-100*. Exiting from the process–process heat exchanger, it is used to provide duty to the reboiler of the *HP_Column*, so that it is further cooled down. After expansion in *VLV-100* it is fed to the *HP_Column*, equipped with a partial reboiler and a total condenser. Here, the feed stream is separated into a bottom stream (*CH4_HP*), richer in methane, and a top stream (*N2_HP*), richer in nitrogen. Both products are fed,

after depressurization, to the *LP_Column*, the former being the feed (CH4_inLP) and the latter providing the reflux (*N2_inLP*). In the *LP_Column*, separation is completed, and essentially pure nitrogen and methane are withdrawn at the top (*N2_prod*) and at the bottom (*CH4_prod*).

The whole process is completely autothermal and does not need any external source for its cooling requirements, entirely satisfied by internal exchanges.

Being the high-pressure products fed to the low-pressure column, where very low temperatures are reached (as low as -190°C), the process cannot tolerate more than a few ppm of CO_2, because of solidification issues.

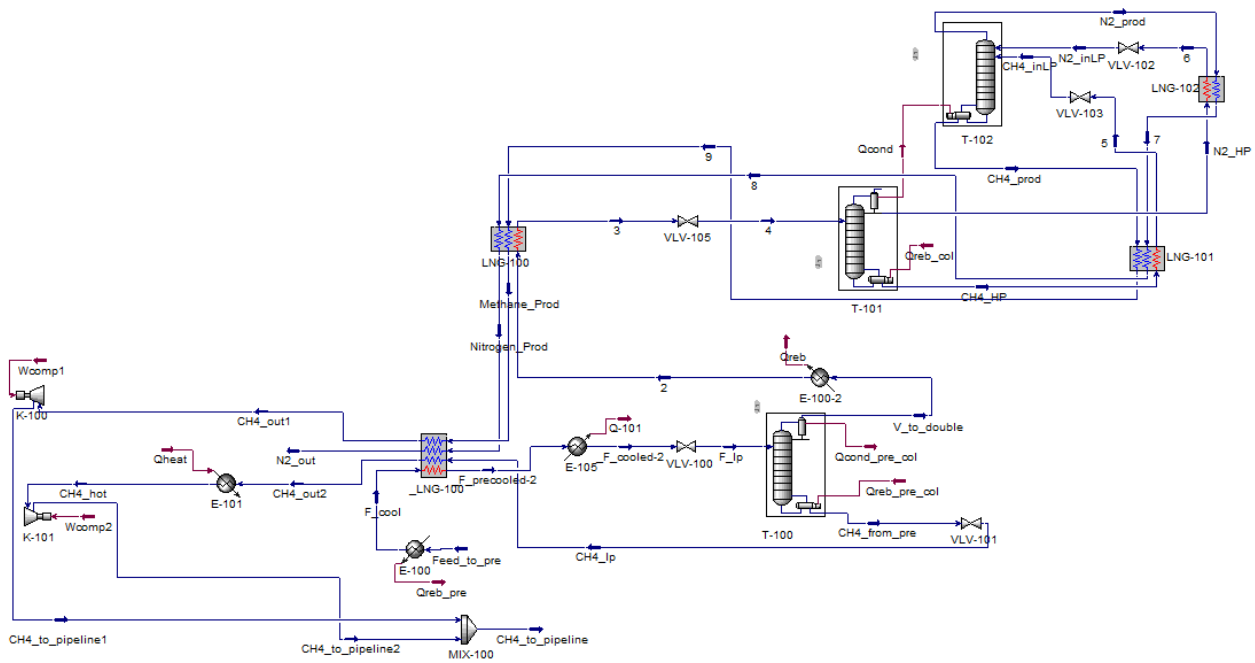

Figure 3. Three-Column process scheme simulated in Aspen Plus V9.0.

The three-column process can be interpreted as a modification of the double column one.

It employs a further upstream distillation column, that acts as a high pressure prefractionator, allowing both to increase the NRU CO_2 - tolerance and to concentrate the feed stream processed in the downstream section.

The prefractionator, in fact, splits the inlet feed in a bottom stream, richer in the heavy components (methane, carbon dioxide and higher hydrocarbons) and a top stream, richer in nitrogen. Since its operating pressure is higher, the freezing risks are lowered and higher inlet carbon dioxide concentrations can be tolerated in the overall process[7-9].

In the three – column process scheme, the feed stream (*Feed_to_pre*) is used as heating medium in the reboiler of the preseparation column, simulated as the external heat exchanger *E-100*. After further cooling against all the product streams in *LNG-100*, it is depressurized and sent to the preseparation column *T-100*. Here, it is fractionated into a concentrated nitrogen vapor stream, *V_to_double*, sent

to the double-column process to complete the separation, and a methane-rich bottom stream, *CH4_from_pre*, the pipeline quality natural gas.

Referring the schemes reported in Figure 1, Figure 2, Figure 3, the feasibility of these different nitrogen rejection schemes in the presence of carbon dioxide was analysed in a previous work[6], because a CO_2-tolerant NRU may lower capital and operating costs reducing the upstream CO_2 removal.

The maximum inlet CO_2 content in each of the analysed configuration is limited by two different constraints: one related to sale gas specifications in terms of Wobbe Index and the other one related to CO_2 solidification within the plant.

Indeed, the maximum allowable CO_2 content in the feed stream has to guarantee pipeline quality natural gas production, considering that all the inlet carbon dioxide is recovered in the upgraded natural gas product. Moreover, CO_2 must not freeze within the plant, so the CO_2 content might be reduced (with a higher Wobbe Index), in principle, after performing a freeze check in the coldest spots of the plant.

Considering the Wobbe Index constraint only, the dashed black line in Figure 4 was obtained: at fixed N_2 inlet feed content, the maximum allowable CO_2 inlet content was evaluated imposing ideal fractionation (i.e., all N_2 is recovered from the top and all CO_2 and CH_4 are recovered from the bottom of the fractionator).

Starting from this theoretical maximum, a range of applicability was determined for each configuration depending on the N_2 and CO_2 content in the feed gas. At fixed N_2 inlet fraction, the maximum allowable CO_2 content in the feed gas was determined, as the one suitable to avoid solidification within the process and to permit the methane bottom product reaching the desired value of the Wobbe Index.

As shown in Figure 4, the stricter constraint is the one for avoiding CO_2 freezing.

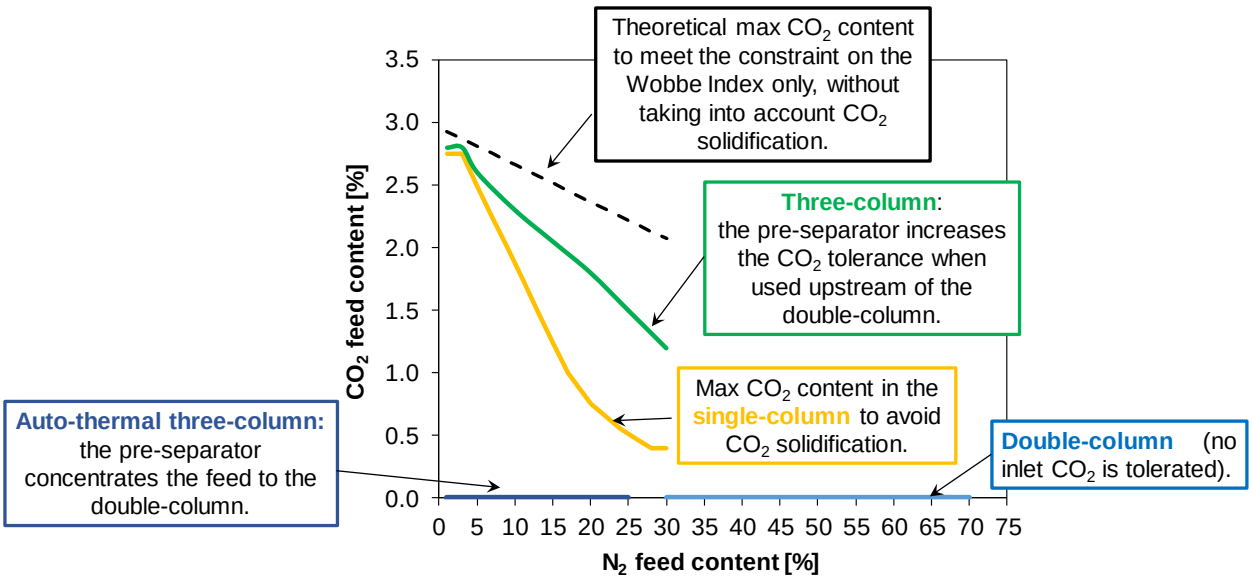

Figure 4. Nitrogen rejection schemes feasibility analysis.

With reference to Figure 4, two areas can be identified corresponding to low-nitrogen inlet contents (below 30 mol %), and high-nitrogen inlet contents (above 30 mol %).

As stated in Mokhatab et al. (2013)[22], the single column process scheme is industrially applied for nitrogen feed content below 30% mol. For nitrogen feed contents higher than 30% mol., the single column configuration is still applicable but it's not the preferable one, due to the too high condenser thermal load and the too low methane recovery.

Considering high-nitrogen inlet contents, only the double column is applicable, but no inlet CO_2 is tolerated because of solidification issues: in these situations, a deep CO_2 purification is required upstream the nitrogen rejection facility.

Focusing on low-nitrogen inlet contents, different process schemes can be applied, depending on N_2 and CO_2 concentration in the feed stream.

When the CO_2 feed content is negligible, the auto-thermicity is achievable for the three column configuration, maximizing the process - process heat exchange.

On the other hand, when CO_2 feed content is not negligible, both single column and three column configurations can be used, depending on the specific feed composition.

Referring to natural gas feed compositions below the yellow line in Figure 4 both single and three column schemes are applicable. Wondering which the most convenient one between these two is, the aim of this work is to assess the performances of these two NRUs, comparing them by means of net equivalent methane and exergy analyses.

3. Single column and three-column nitrogen rejection schemes performances

Thermodynamic performances of the cryogenic nitrogen rejection schemes (i.e., single column and three-column processes) introduced in Section 2 are assessed by means of energy and exergy analyses.

The energy analysis is performed according to the net equivalent methane approach[10,11,] while the exergy analysis is performed according to the traditional exergy method, formalized by Kotas[17,19] and Bejan[18,20].

3.1 Net equivalent methane analysis

The net equivalent methane analysis accounts for the amount of methane required by defined reference processes to deliver thermal and mechanical energy to each one of the analysed equipment[9,10].

The net energy consumption of the process under study is determined, in this way, as the total net CH_4 amount involved in the process itself.

Going into details, the amount of equivalent methane is equal to the amount of methane produced by the process, plus the amount of methane produced by methane-producing items, minus the amount of methane consumed by the methane-consuming processes (Eq. (1)).

$$\dot{m}_{CH_{4,net}} = \dot{m}_{CH_{4,tot}} + \dot{m}_{CH_{4,produced}} - \dot{m}_{CH_{4,consumed}} \qquad (1)$$

In the present case study relevant to the NRU, no methane-producing items are available (see Figure 1, 2 and 3), while in the following are listed the considered methane-consuming processes.

- <u>Cooling duty produced by a proper refrigeration cycle</u>, to cool a process stream down to temperatures lower than the ambient one.

  These refrigeration cycles require mechanical work to be operated, which is considered as electric energy obtained by an equivalent CH_4 – fired combined cycle power plant.

  The theoretical ideal coefficient of performance *COP* of the refrigeration cycle can be calculated according to Eq. (2), where T_H and T_L are the two constant temperatures, respectively, of the condenser and of the evaporator in the refrigeration cycle. The temperature of the hot reservoir has been set equal to 25 °C, whereas that of the cold reservoir has been determined knowing the outlet temperature of the process stream to be cooled down (as obtained from simulations) and considering a temperature approach of 5 °C.

$$COP_{R,Carnot} = \frac{1}{\frac{T_H}{T_L} - 1} \tag{2}$$

Knowing the theoretical value, the real one can be obtained through Eq. (3).

$$COP_R = COP_{R,Carnot} \cdot \eta_{II} \tag{3}$$

Evaluated the COP_R, the amount of methane equivalent to the required cooling duty Q can be determined according to Eq (4).

$$\dot{m}_{CH_4} = \frac{Q}{COP_R \cdot \eta_{CC} \cdot LHV_{CH_4}} \tag{4}$$

- Mechanical work required by compressors, evaluated according to Eq. (5), recalling that the COP_R represents the ratio between the provided cooling duty and the electrical energy consumed, W_{EL}, by the cycle (Eq. (6)).

$$\dot{m}_{CH_4} = \frac{W_{EL}}{\eta_{CC} \cdot LHV_{CH_4}} \tag{5}$$

$$COP_R = \frac{Q}{W_{EL}} \tag{6}$$

Table 1 summarizes the values adopted for the lower heating value of methane, the efficiency of the combined cycle and the second law efficiency for refrigeration cycles.

Table 1. Parameters used in the net equivalent CH_4 analysis.

Parameter	Value	Reference
$LHV_{CH_4}[MJ/kg]$	50	[10]
$\eta_{CC}[-]$	0.55	[10]
$\eta_{II}[-]$	0.60	[10]

Some energy requirements have not been included in the equivalent methane analysis: reboiler of the distillation column in the single column process scheme, in which cooling water can be used as heating medium, reboiler of the *HP_column* in the double column process scheme and reboiler of the preseparation column in the three column process scheme, considering the possibility of energy

integration within the process itself (see E-100 in Figure 1 and 3), reboiler of the *LP_column* and condenser of the HP_*column* in the double column process scheme, which are thermally coupled.

3.2 Exergy analysis

Exergy expresses the amount of mechanical work necessary to produce a material in its specified state from components common in the natural environment, in a reversible way, heat being exchanged only with the environment[19].

Exergy analysis allows to take into account both *quantity* and *quality* of energy streams flowing through the control volume boundaries, uniformly expressing them by means of their mechanical energy equivalents. Exergy analysis can be very useful for cryogenic systems, where the temperature level at which thermal energy is provided is of crucial importance, bearing in mind that energy balances treat all forms of energy as equivalent, without differentiating between their different grades crossing the system boundary.

The setup of the exergy balance starts from the definition of the reference environmental conditions. In the following, the reference environment is assumed with a temperature T_0 = 298.15 K and a pressure P_0 = 1.01325 bar and distinguished by the subscript "0".

Fixed the reference state, the exergy efficiency (η_{ex}) can be evaluated, based on the consumed-produced efficiency, which is defined as the ratio between the change in exergy of the treated flows (the actual useful product of the system) and the sum of the external exergy required by the system to perform the desired change[21], as pointed out in Eq. (7).

$$\eta_{ex} = \frac{\dot{E}x_{out}^{mat} - \dot{E}x_{in}^{mat}}{\dot{E}x^{W} + \dot{E}x^{Q}} \tag{7}$$

The numerator in Eq. (7) represents the minimum amount of mechanical work required to produce pipeline quality natural gas from nitrogen rich natural gas, i.e. the exergy associated with nitrogen removal processes. The denominator represents the sum of mechanical work and heat duty that must be supplied to the process in order to obtain the desired useful effect.

The exergy associated to inlet and outlet material streams in the numerator of Eq. (7) can be evaluated according to Eq. (8), considering the expressions of physical exergy ($ex_{mixt,i}^{Ph}$) and chemical exergy ($ex_{mixt,i}^{Ch}$) reported in Eq. (9) and Eq (10).

$$\dot{E}x^{mat} = \sum_i N_i \cdot \left(ex_{mixt,i}^{Ph} + ex_{mixt,i}^{Ch} \right) \tag{8}$$

$$ex_{mixt,i}^{Ph} = h_i - h_{i,0} - T_0 \cdot \left(s_i - s_{i,0} \right) \tag{9}$$

$$ex_{mixt,i}^{Ch} = \sum_j \left(x_{j,i} \cdot ex_{std,j}^{Ch} \right) + RT_0 \cdot \sum_j \left[x_{j,i} \ln(\gamma_{j,i,id} x_{j,i}) \right] \tag{10}$$

In Eq. (9), $h_{i,0}$ and $s_{i,0}$ are, respectively, the molar enthalpy and the molar entropy of each material stream crossing the system boundary, evaluated at the reference temperature T_0 and pressure P_0, while h_i and s_i are the molar enthalpy and entropy of each material stream crossing the system boundary, evaluated at the actual stream temperature T and pressure P.

In Eq. (10), $x_{j,i}$ stands for the molar fraction of species j in material stream i, while $ex^{Ch}_{std,j}$ is the standard molar chemical exergy of species j, whose value is reported in Table 2 for each of the considered species. Moreover, $\gamma_{j,i,id}$ is the activity coefficient in mixture i considering ideal conditions, and has been set at 1.

Table 2. Standard molar chemical exergy for the species involved in nitrogen rejection process.

species	$ex^{Ch}_{std,j}$ [kJ/kmol]	*Ref.*
CH_4	837000	Szargut, 1962
N_2	720	Szargut, 2005
CO_2	20189	Szargut, 2005

On the other hand, the exergy related to work interactions ($\dot{E}x^W$ in Eq. (7)) is numerically equal to the work as energy[19], as pointed out in Eq. (11), while the exergy related to heat interactions ($\dot{E}x^W$ in Eq. (7)), removed or supplied, can be evaluated from the definition of the Carnot factor, τ_i, which is based on both the temperatures of the environment, T_0, and of the surfaces, T_i, at which the heat transfer of the heat flow Q_i occurs. (Kotas, 2013)

$$\dot{E}x^W = \sum_i \dot{W}_i \tag{11}$$

$$\dot{E}x^Q = \sum_i \dot{Q}_i \cdot \tau_i$$

$$\text{with: } \tau_i = 1 - \frac{T_0}{T_i} \quad for\ T_i > T_0 \tag{12}$$

$$\tau_i = \frac{T_0}{T_i} - 1 \quad for\ T_i < T_0$$

4. Results and discussion

Both single column and three column configurations, whose process schemes are reported in Figure 1 and Figure 3, have been simulated in Aspen HYSYS V9.0®.

Each of the considered process scheme has been simulated for the inlet feed composition reported in Table 3, where N_2 molar fraction varies from 0.05 to 0.2 ($\Delta x = 0.05$) and CO_2 content is the maximum one possible for comparing the two NRU configurations, determined thanks to the feasibility analysis reported in Figure 4 (yellow line in Figure 4).

Table 3. Feed conditions considered for single and three column process scheme simulations.

Feed flow rate *[kmol/h]*	Feed composition [mol fraction]			Feed conditions	
	CH_4	N_2	CO_2	T *[°C]*	P *[bar]*
1000	0.9250	0.0500	0.0250	20	50
1000	0.8813	0.1000	0.0182	20	50
1000	0.8375	0.1500	0.0125	20	50
1000	0.7935	0.2000	0.0065	20	50

For each of the simulated cases, both the equivalent methane and exergy analyses described in section 3 have been applied, in order to evaluate process performances.

In the following, results are reported for the single and three column process schemes, respectively.

4.1 Single column process scheme

The main contributions considered in both equivalent methane and exergy analyses in the single column process scheme are the compressor K-100 and the column partial condenser.

In Figure 5, the results of both analyses are reported, in terms of a) compressor and condenser methane consumptions and b) exergy expenditures as a function of nitrogen inlet feed composition.

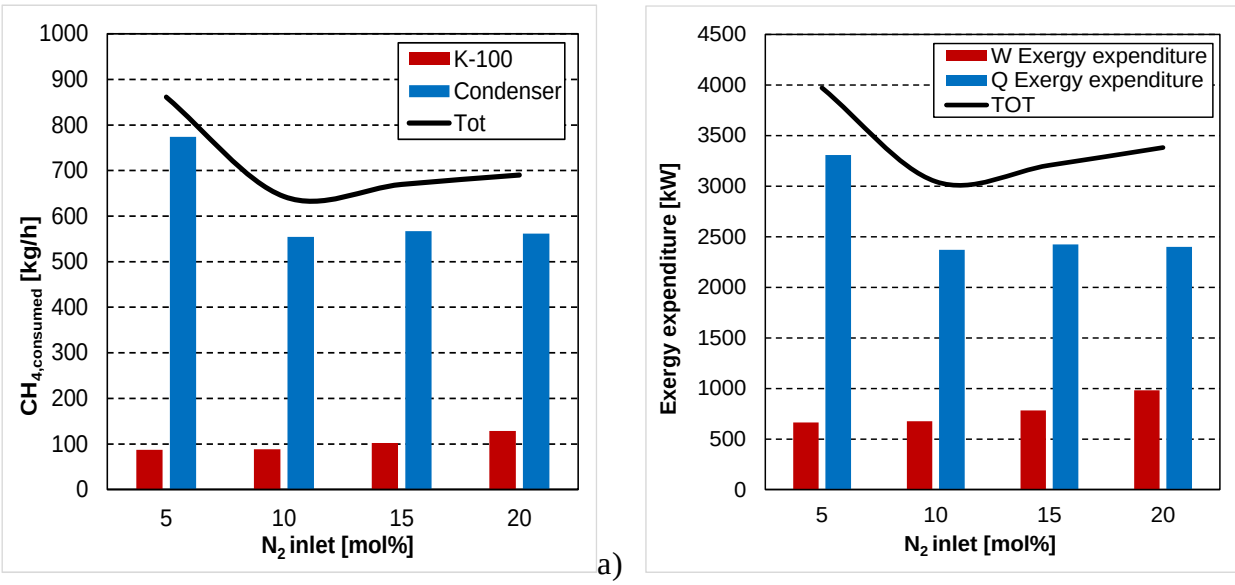

Figure 5. Single column configuration a) methane consumption and b) exergy expenditures at variable N_2 inlet contents.

With reference to Figure 5a, a minimum trend can be observed for the methane consumption associated to the column partial condenser, with a steep decrease going from 5 to 10 % of N_2 in the

inlet feed. As a matter of fact, at increasing N_2 content, the cooling duty required to condense the top stream decreases, decreasing the total methane flow rate inside the column.

Similar conclusions result for exergy expenditures associated to the condenser, represented in Figure 5b.

On the other hand, an increasing trend results for methane consumption associated to compressor K-100. This is a consequence of the maximum allowable pressure downstream the valve VLV_101.

The maximum allowable expansion performed by the valve is limited by CO_2 solidification. At increasing N_2 inlet content, CO_2 inlet content decreases in order to avoid solidification issues within the plant. Being the CO_2 content in the bottom product lower at increasing N_2 content, the distillation column residue *CH_4 product* can be expanded up to lower pressures to perform heat integration. For this reason, recompression work in K-100 is higher at increasing N_2 inlet contents.

As a result from both methane equivalent and exergy analyses, total energy and exergy expenditures as a function of the inlet N_2 concentration for the single column process scheme show a minimum located around 10% mol. N_2, suggesting that the best process performances are registered in this case.

4.2 Three column process scheme

The main contributions associated to both methane equivalent and exergy analyses in the three column process scheme are the compressors K-100 and K-101 and the preseparation column partial condenser. As stated in section 3, the double column is autothermal, so it has not been considered in the following analysis.

Similarly to what done for the single column configuration, the results of the equivalent methane and exergy analyses are reported in Figure 6.

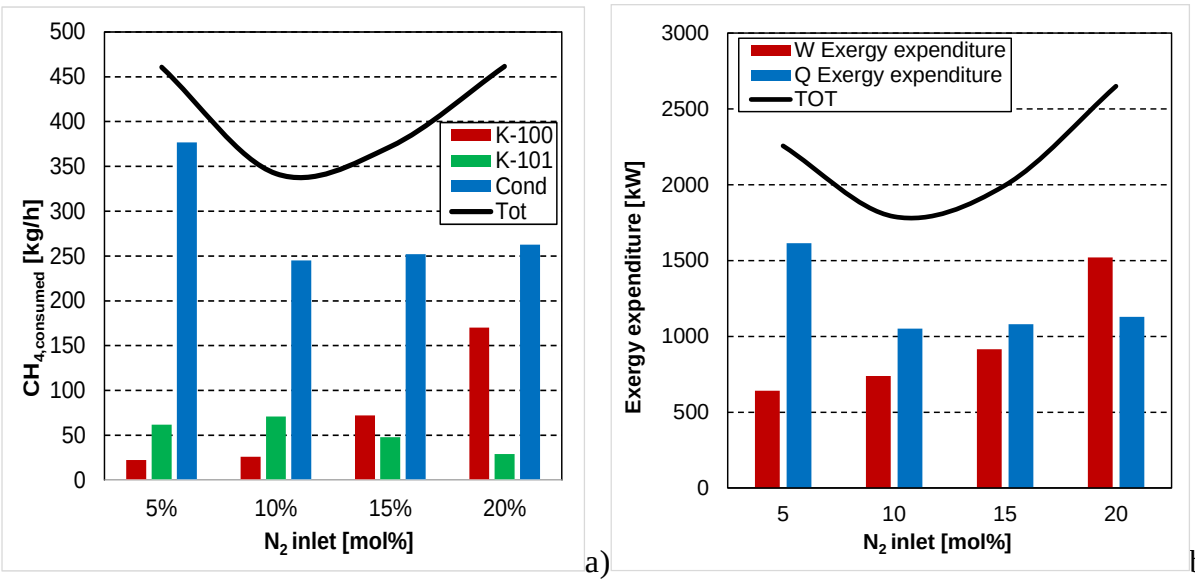

Figure 6. Three column configuration a) methane consumption and b) exergy expenditures at variable N_2 inlet contents.

With reference to Figure 6a, the equivalent methane consumption associated to the preseparation column partial condenser show a minimum trend, as the single column one.

Same results can be appreciated in terms of preseparation column partial condenser exergy expenditures depicted in Figure 6b.

On the other hand, K-100 and K-101 compressors energy and exergy consumptions show opposite trends: while K-100 compression work increases at increasing N_2 inlet contents, K-101 decreases (see Figure 6a). This can be understood considering that K-100 is the double column product compressor, whereas K-101 is the preseparation column one. At increasing N_2 inlet contents, the top product flow rate of the presepration column, i.e. the flow rate that must be treated by the downstream double column, increases. On the contrary, the bottom product flow rate of the preseparation column decreases.

4.3 Comparison between single column and three column process schemes

Referring to the total CH_4 consumptions reported in Figure 5, the equivalent methane per mole of inlet methane is reported in Figure 7.

As a matter of fact, the nearer to 1 the equivalent methane per mole of inlet methane, the less energy consumed.

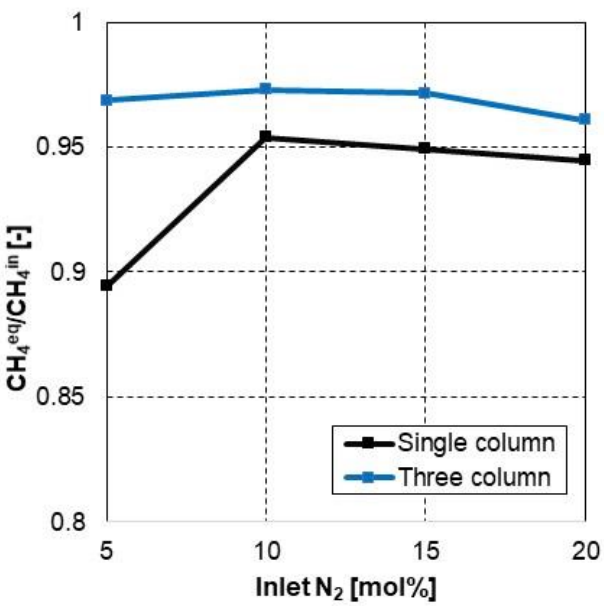

Figure 7. Equivalent methane of single column and three column nitrogen rejection schemes.

As expected, the three-column process scheme is always less energy intensive than the single column one for each of the analysed inlet feed compositions.

The resulting equivalent methane for the three-column configuration is almost constant and close to 1, meaning that few methane consuming processes are associated to the three column configuration. On the other hand, the single column process scheme shows a less constant trend, being this configuration more dependent from the inlet N_2 feed content.

The difference between the two process configurations is maximum for inlet feed compositions containing 5% mol. N_2 and reduces as the nitrogen feed content increases. This evidence suggests that, for high nitrogen feed content, a capital expenses estimate is needed to verify if the higher three column process scheme complexity (thus, higher fixed costs) can be justified by the energy savings depicted (thus, lower operating costs).

Proving that the three-column configuration is more energy-efficient, capable of guaranteeing higher equivalent methane production, the exergy efficiency associated to both process schemes has been analysed and reported in Figure 8.

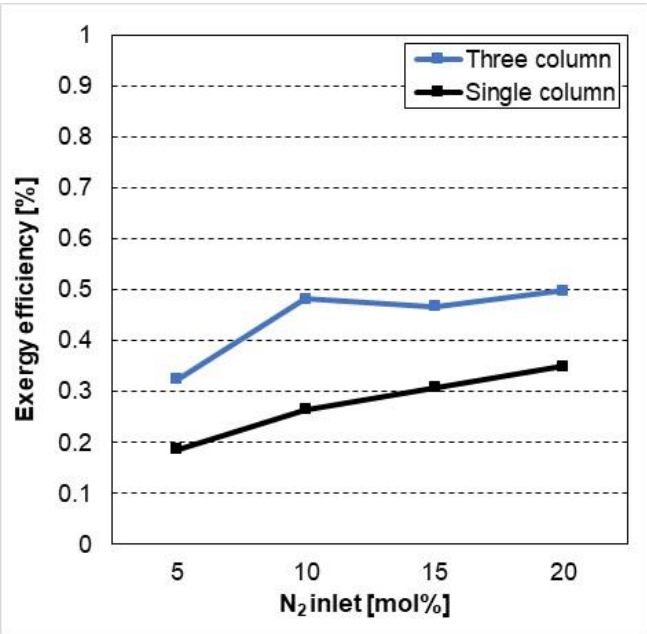

Figure 8. Exergy efficiency of single column and three column nitrogen rejection schemes.

Exergy efficiency associated to both single column and three column process schemes ranges around 0.3 – 0.5.

Thus, the efficiency of this plant is quite low. This means that there are large irreversibilities associated with processes occurring in the compressors and the condensers.

A very high exergy expenditure is associated to the condenser in both single column and three column process schemes. A separate exergy analysis on this equipment can provide, in principle, suggestions for process optimization.

Both single column and three column process schemes exergy efficiencies show a quite increasing trend with nitrogen feed inlet content, with the three-column process scheme being more exergy efficient than the single column one for each of the cases analysed.

To better understand the exergy flows that cross system boundaries, Grassmann diagrams have been reported in Figure 9 and Figure 10 for the two analysed process configurations at variable inlet feed: grey arrows represent the exergy associated to material streams, while black arrows represent the exergy equivalents of heat and work flows.

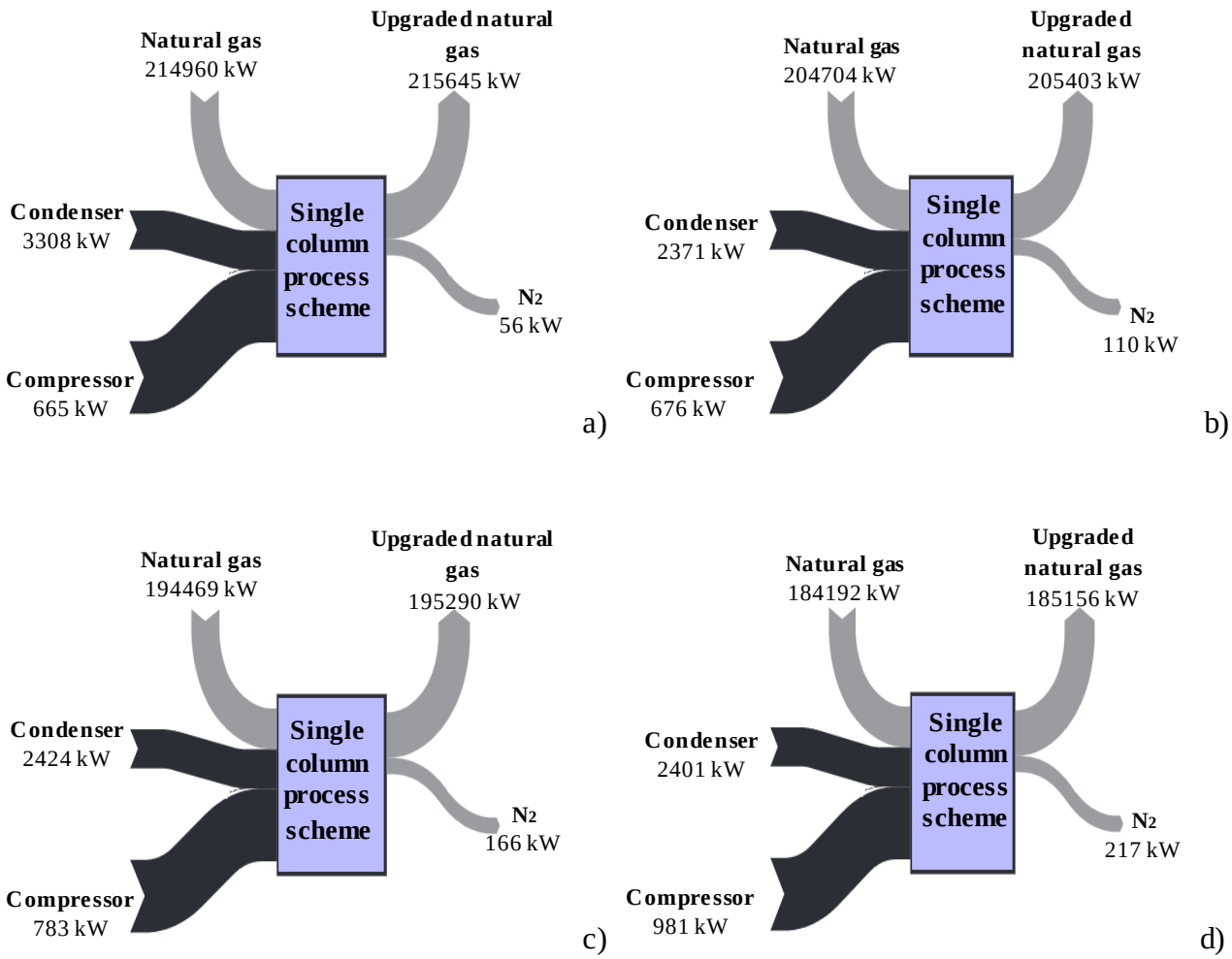

Figure 9. Grassmann diagram for the single column process scheme for a) inlet N_2 = 5% mol.; b) inlet N_2 = 10% mol.; c) inlet N_2 = 15% mol.; d) inlet N_2 = 20% mol..

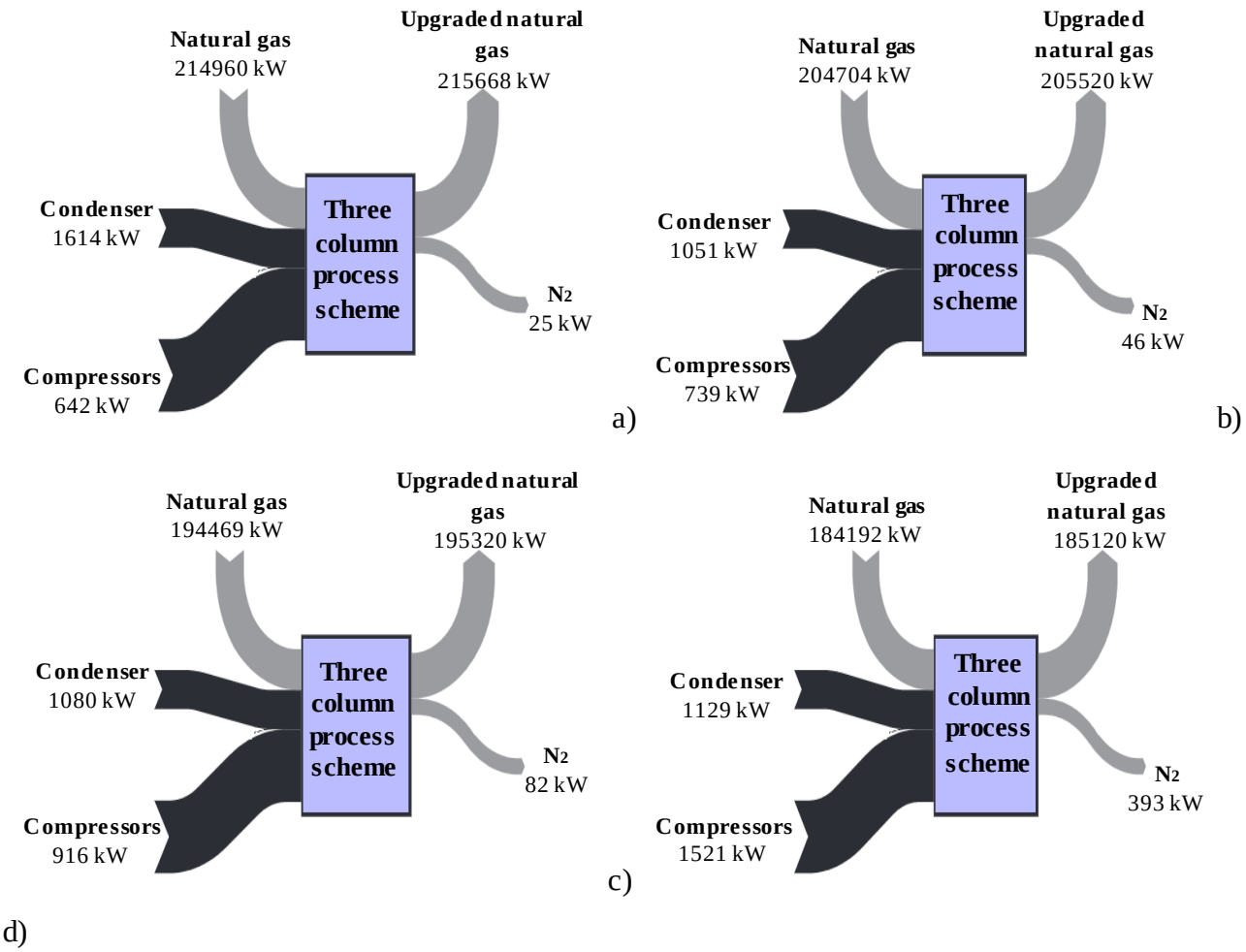

d)

Figure 10. Grassmann diagram for the three column process scheme for a) inlet N_2 = 5% mol.; b) inlet N_2 = 10% mol.; c) inlet N_2 = 15% mol.; d) inlet N_2 = 20% mol..

With reference to Figure 9 and Figure 10, the numerical differences between all the inlet and outlet flows of the two schemes result in the total exergy destructions caused by the systems. As can be inferred from the numerical results collected in Table 4, the exergy destructions decrease at increasing nitrogen content, being the system more efficient, with the three-column configuration showing the minimum difference between inlet and outlet streams for 10% mol N_2.

Table 4. Total exergy destructions for single column and three column process schemes.

Inlet N_2 *[mol%]*	Exergy destructions [kW]	
	Single column	**Three column**
5	3231.76	1524.16
10	2238.27	927.09
15	2220.30	1062.59
20	2200.96	1329.25

5. Conclusions

Process selection for the NRU should be based on operating flexibility, complexity of the process scheme, and sensitivity to feed gas compositions in addition to life cycle costs. The key parameters for process selection are feed gas nitrogen and CO_2 contents, feed pressure, flow rate, methane recovery, and contaminant level. The most important feature is the CO_2 tolerance of the selected process.

Following a previous feasibility study for different NRU schemes in the presence of CO_2, this work investigates the process energy and exergy performances, accounted with the equivalent methane and exergy analyses.

While energy analysis provides absolute values for the methane required to sustain each process, exergy analysis provides a value for their efficiencies, enabling to quantify how much each process is far from the ideal thermodynamic reference process. Therefore, even if the thermodynamic performance ranking of the three analyzed process is the same according to energy and exergy analyses, the latter provides more useful information and thus it should be preferred.

This paper demonstrates that the three-column process scheme configuration for nitrogen rejection from natural gas provides the most convenient configuration in terms of energy and exergy expenditures, if compared to the other available process schemes.

The higher complexity of the three column process scheme is balanced not only by its higher energy and exergy performances, but also by its higher flexibility in terms of CO_2 feed content compared to the single column one, thus requiring a not too deep CO_2 removal upstream.

Nomenclature

Abbreviations

COP Coefficient Of Performance

IEA International Energy Agency

LHV Lower Heating Value

LNG Liquefied Natural Gas

NRU Nitrogen Rejection Unit

WI Wobbe Index

Greek symbols

η Efficiency

$\gamma_{j,i,id}$ Activity coefficient of species j in mixture i in ideal conditions

τ_i Carnot factor associated to mixture i

References

1. Just E-volution 2030. The socio-economic impacts of energy transition in Europe. The European House – Ambrosetti for Enel and Enel Foundation.
2. World Energy Model. Scenario analysis of future energy trends. IEA
3. The Linde Group *State-of-the-art nitrogen rejection technology-Increasing the energy density of natural gas*; 2016.
4. Kidnay, A. J.; Parrish, W. R., *Fundamentals of natural gas processing*. CRC Press Taylor & Franscis Group: Boca Raton, Florida, USA, 2006.
5. De Guido, G., Messinetti, F., Spatolisano, E., Cryogenic Nitrogen Rejection Schemes: Analysis of Their Tolerance to CO_2. *Industrial & Engineering Chemistry Research* **2019,** 58, 17475-17488.
6. AspenTech *Aspen Hysys®*; AspenTech: Burlington (MA), United States, 2016.
7. Johnson, G. L.; Finn, A. J.; Tomlinson, T. R., Process and apparatus for separation of hydrocarbons and nitrogen. In Google Patents: 2012.
8. Johnson, G. L.; Tomlinson, T. R.; Phillips, L. A., Process and apparatus for separation of hydrocarbons and nitrogen. In Google Patents: 2012.
9. Johnson, G. L.; Finn, A. J., Process and apparatus for separation of hydrocarbons and nitrogen. In Google Patents: 2016.
10. De Guido, G.; Fogli, M. R.; Pellegrini, L. A., Effect of Heavy Hydrocarbons on CO_2 Removal from Natural Gas by Low-Temperature Distillation. *Industrial & Engineering Chemistry Research* **2018,** 57, (21), 7245-7256.
11. Pellegrini, L. A.; De Guido, G.; Lodi, G.; Mokhatab, S., CO_2 Capture from Natural Gas in LNG Production - Comparison of Low-Temperature Purification Processes and Conventional Amine Scrubbing. In *Cutting-Edge Technology for Carbon Capture, Utilization, and Storage*, Ballerat-Busserolles, K.; Wu, Y.; Carroll, J. J., Eds. Wiley: 2018; p 384.
12. Rufford, T. E.; Smart, S.; Watson, G. C.; Graham, B.; Boxall, J.; Da Costa, J. D.; May, E., The removal of CO_2 and N_2 from natural gas: A review of conventional and emerging process technologies. *Journal of Petroleum Science and Engineering* **2012**, 94, 123-154.

13. Kuo, J.; Wang, K.; Chen, C., Pros and cons of different Nitrogen Removal Unit (NRU) technology. *Journal of Natural Gas Science and Engineering* **2012**, 7, 52-59.
14. Kohl, A. L.; Nielsen, R., *Gas purification*. Gulf Professional Publishing: Houston, TX, USA, 1997.
15. Farooq, A.; Finn, A.; Hosainy, A.; Johnson, G., Carbon dioxide-tolerant nitrogen rejection reduces costs. In *GPA Europe Annual Conference*, Florence, Italy, 2015.
16. Eggeman, T.; Chafin, S. In *Pitfalls of CO_2 freezing prediction*, Proceedings of the 82nd Annual Convention of the Gas Processors Association, San Antonio, TX, USA, 2003.
17. Kotas, T.J., The exergy method of thermal plant analysis. Paragon: 2012.
18. Bejan, A., Advanced engineering thermodynamics. John Wiley & Sons: 2006.
19. Kotas, T.J., The exergy method of thermal plant analysis. Malabar Elsevier: 2013.
20. Bejan, A.; Tsatsaronis, G.; Moran, M.; Thermal design and optimization. 1st edition. New York John Wiley & Sons: 1996.
21. Baccanelli, M.; Langé, S.; Rocco, M.V.; Pellegrini, L.A.; Colombo, E., Low temperature techniques for natural gas purification and LNG production:an energy and exergy analysis. Applied Energy **2016**, 180, 546–559.
22. Mokhatab, S.; Mak, J.; Valappil, J.; Wood, D., Handbook of liquefied natural gas, Gulf Professional Publishing, Book Division, Houston, Texas: 2013.

Graphical abstract

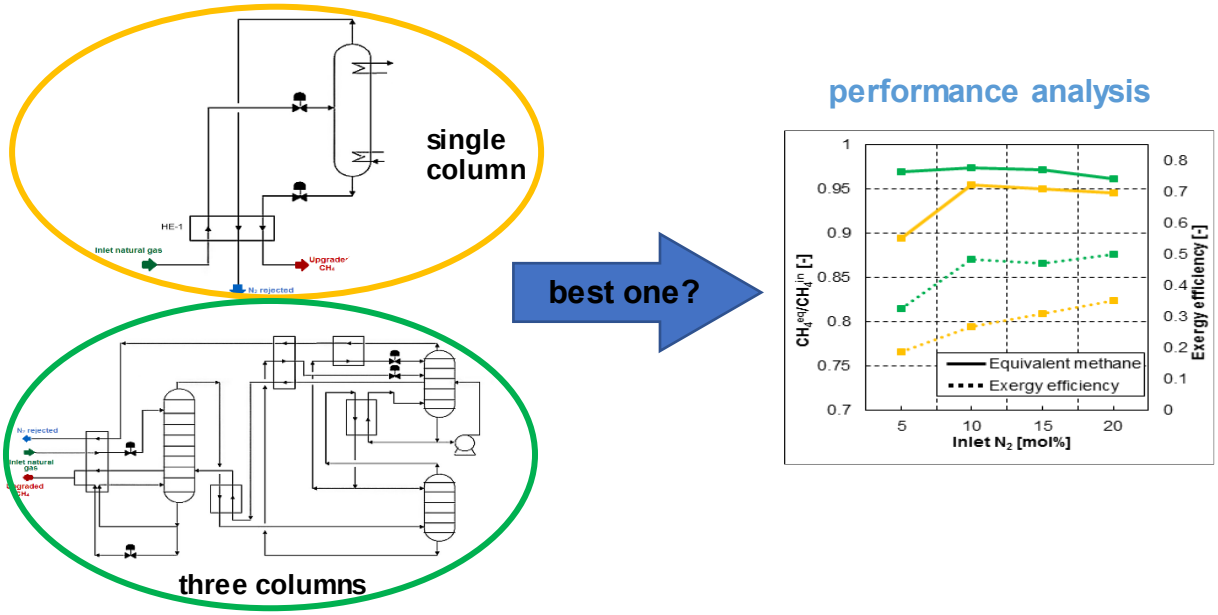

Highlights

- This paper deals with the assessment of nitrogen rejection schemes performances.
- Different configurations based on cryogenic distillation are analysed.
- Each configuration is characterized by means of energy and exergy analysis.
- The best performing scheme is evaluated depending on the feed composition.