INTERNATIONAL JOURNAL OF HYDROGEN ENERGY 52 (2024) 703–717

Available online at www.sciencedirect.com

ScienceDirect

journal homepage: www.elsevier.com/locate/he

Assessing opportunities and weaknesses of green hydrogen transport via LOHC through a detailed techno-economic analysis

Elvira Spatolisano [a], *Federica Restelli* [a], *Angelo Matichecchia* [a], *Laura A. Pellegrini* [a,*], *Alberto R. de Angelis* [b], *Simone Cattaneo* [b], *Ernesto Roccaro* [b]

[a] *GASP - Group on Advanced Separation Processes & GAS Processing, Dipartimento di Chimica, Materiali e Ingegneria Chimica "G. Natta", Politecnico di Milano, Piazza Leonardo da Vinci 32, 20133 Milano, Italy*
[b] *Eni S.p.A. Research and Technological Innovation Department, Via F. Maritano 26, 20097 San Donato Milanese, Italy*

HIGHLIGHTS

- Toluene and dibenzyltoluene technical assessment as H_2 carrier.
- Hydrogen destination to H_2 valley.
- Hydrogenation and dehydrogenation process simulation in Aspen Plus V11®.
- Most impactful cost-items: hydro/dehydrogenation and carrier initial loading.
- Key parameters for the H_2 carrier selection: hydrogenation enthalpy and cost.

ARTICLE INFO

Article history:
Received 28 April 2023
Received in revised form
10 July 2023
Accepted 4 August 2023
Available online 31 August 2023

Keywords:
Green H_2
LOHC
Process design
Detailed techno-economic assessment

ABSTRACT

In the transition towards a more sustainable energy system, hydrogen is seen as the key low-emission energy source. However, the limited H_2 volumetric density hinders its transportation. To overcome this issue, liquid organic hydrogen carriers (LOHCs), molecules that can be hydrogenated and, upon arrival, dehydrogenated for H_2 release, have been proposed as hydrogen transport media. Considering toluene and dibenzyltoluene as representative carriers, this work offers a systematic methodology for the analysis and the comparison of LOHCs, in view of identifying cost-drivers of the overall value-chain. A detailed Aspen Plus process simulation is provided for hydrogenation and dehydrogenation sections. Simulation results are used as input data for the economic assessment. The process economics reveals that dehydrogenation is the most impactful cost-item, together with the carrier initial loading, the latter related to the LOHC transport distance. The choice of the most suitable molecule as H_2 carrier, ultimately, is a trade-off between its hydrogenation enthalpy and cost.
© 2023 The Author(s). Published by Elsevier Ltd on behalf of Hydrogen Energy Publications LLC. This is an open access article under the CC BY license (http://creativecommons.org/licenses/by/4.0/).

* *Corresponding author.*
E-mail address: laura.pellegrini@polimi.it (L.A. Pellegrini).
https://doi.org/10.1016/j.ijhydene.2023.08.040
0360-3199/© 2023 The Author(s). Published by Elsevier Ltd on behalf of Hydrogen Energy Publications LLC. This is an open access article under the CC BY license (http://creativecommons.org/licenses/by/4.0/).

Abbreviations

BFD	Block Flow Diagram
BFW	Boiler Feed Water
CAPEX	CAPital EXpenditures
CEPCI	Chemical Engineering Plant Cost Index
CW	Cooling Water
DBT	DiBenzylToluene
DMC	Direct Manufacturing Costs
FCI	Fixed Capital Investment
FMC	Fixed Manufacturing Costs
GE	General Expenses
H18-DBT	Perhydrodibenzyltoluene
IFO	Intermediate Fuel Oil
LCOHT	Levelized Cost Of Hydrogen Transport
LOHC	Liquid Organic Hydrogen Carriers
OPEX	OPerating Expenditures
TRL	Technology Readiness Level
WACC	Weighted Average Cost of Capital

1. Introduction

In the energy transition towards a more sustainable energy system, green hydrogen is seen as the key to achieve the decarbonization target [1]. The growing interest in employing hydrogen as a clean energy source is due to two major aspects: 1) hydrogen can be used without direct emissions of greenhouse gases; and 2) it can be produced from a number of low-carbon energy sources.

Despite hydrogen production through water electrolysis goes back to 1800s and its application as a fuel for internal combustion engines was proved over 200 years ago, challenges in hydrogen-based economy are still present, related, on the one hand, to its cost-effective production and, on the other hand, to its affordable distribution [2,3]. As a matter of fact, the low volumetric density of hydrogen inhibits its use as an economically viable energy vector, even when compressed to high pressures or liquefied. Hydrogen is typically moved in its gaseous state under extremely high pressures, 700 bar according to the existing technical applications, which is known as "Compressed Gaseous Hydrogen" (CGH2) [4]. This concept implies huge compression costs, both in terms of capital expenditures and energy requirements. Alternatively, the "state of the art" of hydrogen supply chain relies on the transportation in its liquid state, which requires temperatures below −253 °C [5]. Vacuum-insulated liquid tankers allow for the transportation of hydrogen in large quantities (up to 4300 kg) and over longer distances [6,7]. Nonetheless, the process of liquefying hydrogen demands a significant amount of energy, even more than 10 kWh per kg of hydrogen, equivalent to more than 30% of its energy content, in addition to losses due to boil-off during transportation [8,9].

These two mentioned transportation concepts are intricate in terms of technology, entail a critical emphasis on safety, and require a significant financial investment for establishing a distribution infrastructure on a large scale [10]. To overcome this issue, a number of hydrogen carriers have been considered, as ammonia or liquid organic hydrogen carriers (LOHCs) [11].

Ammonia remains in a liquid state at room temperature under around 10 bar pressure, with a vapor pressure similar to propane. While producing ammonia for transportation purposes and converting it back into hydrogen requires a significant amount of energy, the infrastructure for handling and shipping ammonia is already well established [12].

Ammonia's main benefits lie in its high hydrogen content, about 17.8 wt%. Moreover, it can be produced using renewable hydrogen and nitrogen from the air, without the need for involving carbon species during the synthesis process. To ensure the implementation of NH_3 as H_2 vector, research efforts are devoted to enabling efficient ammonia production from renewables [13] as well as decreasing the operating expenses of the cracking stage [14].

On the other hand, LOHCs are organic molecules which can be reversibly hydrogenated and dehydrogenated to release hydrogen. Since they are liquid at ambient temperature and pressure, they are effective in hydrogen storage without losses. Moreover, being oil-like substances, they can be easily handled with existing infrastructures for oil products. Due to the increasing research interest in these compounds, several reviews are aimed at defining the features of the best candidates for hydrogen storage and transport [15–17]. The optimal LOHC has to show:

- low melting point, to avoid solidification issues;
- low dehydrogenation enthalpy, to limit the energy demand of the dehydrogenation reaction;
- high boiling point, to avoid its volatilization and to favour its separation from the produced hydrogen;
- high H_2 storage capacity;
- low toxicity;
- low cost. It is worth noticing that, at increasing complexity of the organic molecule, its cost increases, too, thus hindering the cost-effective scale up of the whole hydrogen transport technology.

A variety of cyclic hydrocarbons could serve as LOHCs. These include benzene/cyclohexane, toluene/methylcyclohexane, naphthalene/decalin, biphenyl/bicyclohexyl and dibenzyltoluene/perhydro-dibenzyltoluene, as shown in. These substances are frequently employed in industrial applications; for instance, the global production of benzene and toluene is around 50 million metric tons per year, and their cost is less than 1 euro per kilogram [18,19]. Nonetheless, it should be noted that several of these aromatic compounds pose risks due to their carcinogenic or flammable nature, and some exist as solids at room temperature. The hydrogen storage capabilities of these cyclic hydrocarbons fall within a 6–8 wt% range, with the heat involved in hydrogenation and dehydrogenation processes being reasonably within 62–69 kJ mol−1−H_2 [20,21].

Among all the available alternatives, aromatic rings are the primary candidates: toluene (hydrogenated form: methylcyclohexane) was firstly proposed by the Chiyoda corporation together with Mitsubishi Corporation, Mitsui & Co. Ltd. and NYK Line [23]. By the end of 2020, the world's first global

hydrogen supply chain system was demonstrated by transporting and storing over 100 tons of hydrogen over ten months from Brunei Darussalam to Kawasaki (Japan). Showing the highest technology readiness level (TRL), toluene can be defined as the benchmark for LOHCs. However, although its maturity and the advantage of large availability at low cost, the main drawback associated to toluene as hydrogen carrier is the benzene co-production within the dehydrogenation reaction, leading to toxicity issues. To overcome this disadvantage, dibenzyltoluene (hydrogenated form: perhydrodibenzyltoluene) was proposed by Hydrogenious [24–26] and it is now under evaluation for implementation at large scale. However, dibenzyltoluene as a raw material shows an about 10 times higher price than toluene, this evidence affecting the overall process economics.

In view of optimizing the hydrogen transport costs, reducing the dehydrogenation enthalpy can be an important aspect to focus on. Both toluene and dibenzyltoluene (DBT) are homocyclic and present high dehydrogenation enthalpies. On the other hand, heterocyclic compounds, *i.e.*, molecules with a heteroatom included in the aromatic ring, as N-substituted (carbazoles, pyridines and quinolines) or O-based compounds (lactones) show a reduced aromaticity, promoting H_2 release at milder conditions. Moreover, O-based molecules, as opposite to many proposed organic carriers, which are obtained from petrochemical feedstocks, can be obtained from renewable sources, such as biomass. This evidence can be of paramount importance for increasing the sustainability of the entire process. However, the TRL of these alternatives is too low to think about their implementation at the industrial scale. Research efforts are still needed to deepen the hydrogenation/dehydrogenation reaction at the laboratory scale (see Table 1).

Together with the scouting of the best candidates as LOHCs, a number of techno-economic assessments of the whole hydrogen transport value chain is available in literature. The most recent studies are reported in Table 2. Two main scenarios are proposed, namely long-distance harbour-to-harbour hydrogen transport or road hydrogen transport, and their performance are evaluated according to different methodologies and assumptions. Depending on the hypotheses on which each study is based on, very different results are obtained, such that it is difficult to draw general conclusions. The ultimate goal of most of the studies available in literature is to demonstrate the economic viability of organic carriers for hydrogen transport, rather than technically assessing each stage of the H_2 value chain, with a particular focus on the hydrogenation and dehydrogenation stages from the engineering point of view.

Within this panorama, and to fill this gap, the aim of this work, is to perform a detailed technical analysis, coupled with an economic assessment, of hydrogen transport through LOHCs. Particular attention is paid to hydrogenation and dehydrogenation stages, that have been simulated through Aspen Plus V11® simulation software. Toluene and dibenzyltoluene are considered as representative carriers, due to

Table 1 – Physico-chemical and hydrogen storage properties for cyclic hydrocarbons suited for LOHC applications [18–22].

	Dehydrogenated form (H_0)	Hydrogenated form (H_x)	Melting point [°C]		Boiling point [°C]		Density (H_x) [kg/l]	Enthalpy difference [kJ/mol$_{H2}$]	Hydrogen content	
			H_0	H_x	H0	Hx			wt.%	[kg/m3]
Benzene			5.5	7	80	81	0.779	68.6	7.2	56.08
Toluene			−95	−127	111	101	0.770	68.3	6.2	47.74
Naphthalene	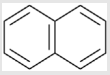	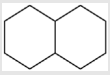	80	−43/−30	218	196/187	0.890	66.4	7.3	64.97
Biphenyl	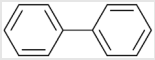		70	4	255	228	0.864	67.0	7.1	61.34
Dibenzyltoluene	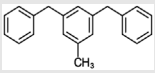	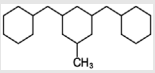	−391/−34	<−50	390	371	0.910	62.0	6.2	56.43

Table 2 – Most recent studies for H_2 transport and distribution through LOHC.

Reference	LOHC	Scenario
Hurskainen and Ihonen (2020) [27]	DBT	road transport
Niermann et al. (2021) [28]	DBT, toluene, methanol, N-ethylcarbazole	harbour-to-harbour
Raab et al. (2021) [29]	toluene, DBT	harbour-to-harbour
Reuβ et al. (2017) [30]	DBT	road transport
Papadias et al. (2021) [31]	methanol, toluene	
Noh et al. (2023) [32]	toluene	harbour-to-harbour
Roland Berger (2021) [33]	benzyltoluene	harbour-to-harbour, road transport
Chodorowska and Farhadi (2021) [34]	toluene	harbour-to-harbour

the high maturity of the former and the promising features of the latter. The framework developed allows to identify cost drivers and weaknesses of the overall value chain and, ultimately, offers a systematic methodology for the analysis and the comparison of different carriers.

2. Hydrogen value chain with a LOHC as carrier

With the aim of performing a feasibility study of hydrogen transport through LOHCs, the case study of hydrogen transport from North Africa to a Mediterranean port has been analysed, considering toluene and dibenzyltoluene as hydrogen carriers.

The whole hydrogen transport value chain is reported in Fig. 1 and it has been studied according to the assumptions listed in the following.

1. At the loading terminal, flat hydrogen production of 20000 Nm^3/h is supposed via 100 MW alkaline electrolysers, available at 20 bar and 25 °C. Since the aim of this work is the evaluation of H_2 transport cost through LOHC, no cost for green hydrogen production has been introduced in the economic assessment. Considering the size of alkaline electrolysers assumed, the resulting hydrogen production is much lower than the one of the actual fossil-based ammonia production plants. This is because, when the industrial production site has to be driven by renewable energy, the plant size has to be tuned according to the land footprint of renewables. The selected renewable hydrogen productivity is compliant with a reasonable extent of land needs, to put the feasible scale of green ammonia production into perspective.
2. At the loading terminal, hydrogen and the organic carrier undergo an exothermic hydrogenation reaction. The hydrogenated species is stored into storage tanks and then routed to the unloading terminal via ship transport.
3. The harbour-to-harbour distance of 2500 km is covered via ship fuelled by traditional fossil-based fuels (IFO 380 1%S).
4. Once arrived at the unloading terminal, the organic carrier is routed to a H_2 valley, located 100 km far from the harbour. Transport of the hydrogen carrier from the harbour to the valley is performed via truck.
5. At the H_2 valley, the carrier has to undergo the dehydrogenation reaction for hydrogen release. H_2 is produced at a pressure of 30 bar and a purity higher than 99.9 mol%, suitable for its industrial applications.

The conversion and reconversion stages of the organic carrier to hydrogen have been simulated in Aspen Plus V11® [35], while for storage, ship transport and road transport reference is made to literature case-studies. As the organic carriers are oil like substances, they can be easily handled and adapted to the existing infrastructures for oil products, whose data can be easily retrieved.

Each stage of the value chain reported in Fig. 1 is detailed in section 3.

3. Technical assessment

3.1. *Hydrogenation*

Process simulation for toluene hydrogenation is shown in Fig. 2. Toluene coming from the unloading terminal is mixed with the make-up stream, pumped and heated up to the reaction pressure and temperature, 20 bar and 210 °C, respectively [36]. The heating is performed in a process-process heat exchanger, *PREHEAT* in Fig. 2, to exploit the high enthalpy content associated with the reaction products. The hydrogenation reaction (1) is strongly exothermic. To control the

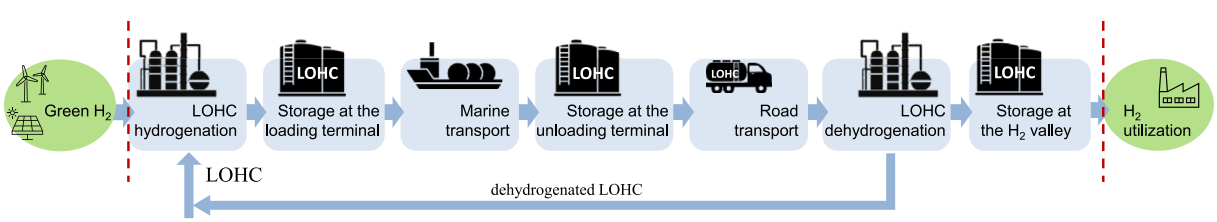

Fig. 1 – Liquid organic hydrogen carriers (LOHCs) value chain. The dashed red lines indicate the system boundaries. (For interpretation of the references to colour in this figure legend, the reader is referred to the Web version of this article.)

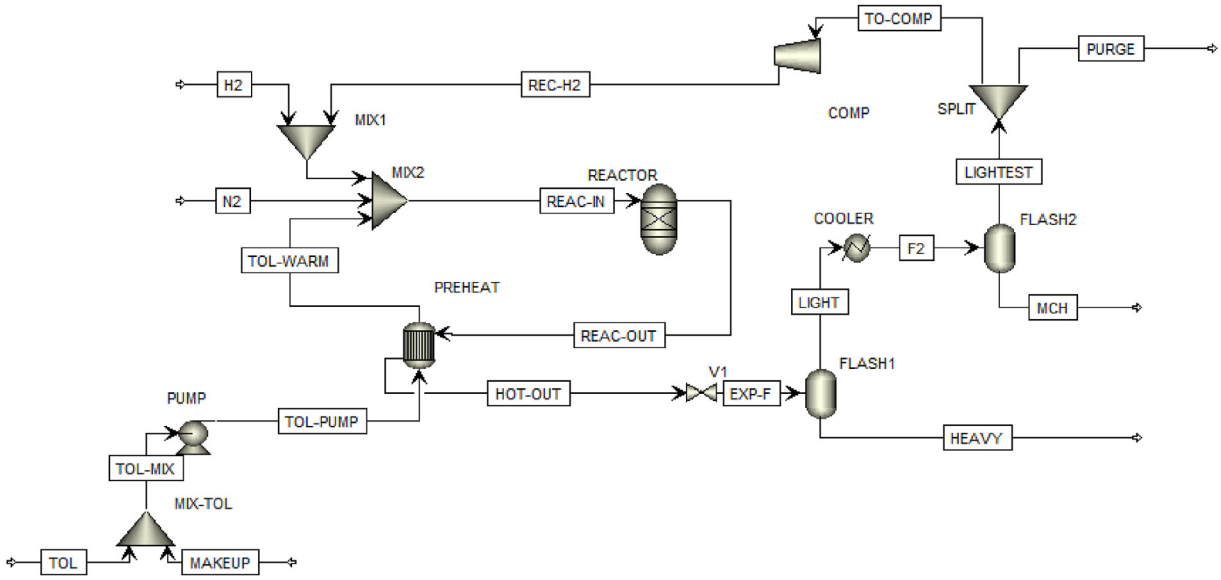

Fig. 2 – Toluene hydrogenation to methylcyclohexane. Simulation in Aspen Plus V11®.

reaction exothermicity, nitrogen is fed as a thermal diluent, with a flow rate such that N_2 concentration in the reactor inlet stream (*REAC-IN* in Fig. 2) is equal to about 17 mol% [37]. Together with nitrogen and toluene, also green hydrogen produced via water electrolysis, stream *H2* in Fig. 2, is fed to the battery limits. The reactor has been simulated through the RGibbs module of Aspen Plus®. In this unit, the reactants conversion is the thermodynamic equilibrium one. The mixture exiting the reactor, stream *REAC-OUT* in Fig. 2, consisting of non-converted hydrogen, nitrogen and methylcyclohexane, after cooling in *PREHEAT*, is routed to the downstream separation stages, to recover products and byproducts and separate them from reactants. The separation section consists of two flash drums in series, *FLASH 1* and *FLASH 2* in Fig. 2. In these units, the outlet mixture from the reactor, after expansion in *V1* valve, is firstly purified from the heavy ends and then from the light ends. The methylcyclohexane produced, *MCH* in Fig. 2, is stored and then transported by ship to the unloading terminal. The unconverted hydrogen, stream *LIGHTEST* in Fig. 2, is compressed in *COMP* and then recycled back to the reaction section.

$$C_7H_8 + 3H_2 \rightarrow C_7H_{14} \quad (1)$$

The reaction heat is exploited for steam production from boiler feed water, as represented in Fig. 3.

Inlet and outlet streams specifications for toluene hydrogenation process of Fig. 2 are reported in Table 3, while Table 4 and Table 5 summarize, respectively, the thermal and power consumption of the same process.

Similarly to what performed for toluene, the hydrogenation process for dibenzyltoluene (reaction (5)), has been

Table 3 – Inlet and outlet streams specifications for toluene hydrogenation process of Fig. 2.

stream		H2	N2	TOL	MAKEUP	MCH
T	[°C]	25	25	25	25	25
P	[bara]	20	20	1.01	1.01	1.01
molar fractions						
MCH		0	0	0.0473	0	0.9980
TOL		0	0	0.9514	1	0.0009
H_2		1	0	0.0004	0	0
BENZ		0	0	0.0009	0	0
N_2		0	1	0	0	0.0010
F_{TOT}	[kmol/h]	892.91	14.00	293.77	17.50	296.17

Table 4 – Thermal energy consumption for toluene hydrogenation process of Fig. 2, together with the corresponding utility.

equipment	T_{IN} [°C]	T_{OUT} [°C]	Q [kW]	*utility*
REACTOR	146	210	−14557.1	BFW
COOLER	82	50	−3378.5	CW

Table 5 – Power consumption for toluene hydrogenation process of Figs. 2 and 3.

equipment	P_{IN} [bara]	P_{OUT} [bara]	W [kW]
PUMP	1.01	20	30.22
COMP	1.01	20	1412.97
WAT-P	0.05	15	15.12

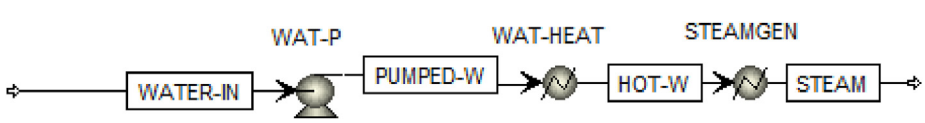

Fig. 3 – Steam production from boiler feed water (BFW). Simulation in Aspen Plus V11®.

simulated in Aspen Plus V11®, and is represented in Fig. 4. Before the process simulation phase, dibenzyltoluene and its corresponding hydrogenated form, not available in the Aspen Plus databank, have been added as pseudo-components, considering the physical properties available in Table 6, together with the expressions for the heat capacity (equation (2)), vapor pressure (equation (3)) and density evaluation (equation (4)). Parameters for equations (2)–(4) are listed in Table 7.

$$c_p\left(\frac{J}{K\cdot g}\right) = a + bT[K] + cT[K]^2 + dT[K]^3 \tag{2}$$

$$\ln p(Pa) = \frac{377.98}{R} - \frac{126201.14}{R\cdot T[K]} - \frac{127.6}{R}\ln\left(\frac{T[K]}{298.15}\right) \tag{3}$$

$$\rho(T) = A + B\cdot T[K] \tag{4}$$

The dibenzyltoluene hydrogenation process, simulated in Aspen Plus V11®, is reported in Fig. 4. The organic carrier coming from the unloading terminal (*H0-DBT* in Fig. 4), is the make-up stream (whose flow rate is very limited) and is routed to the reactor, after being pumped and heated. The reactor, *B2* in Fig. 4, is fed with dibenzyltoluene, hydrogen and nitrogen, whose flowrate is set at the same value for toluene hydrogenation.

$$C_{21}H_{20} + 9H_2 \rightarrow C_{21}H_{38} \tag{5}$$

The operating conditions of the reactor are 35 bar and 210 °C. Considering the state-of-the-art of DBT hydrogenation and dehydrogenation, the kinetic scheme cannot be implemented: there is not a ready-to-use and univocally defined kinetic mechanism to be introduced in process simulation. To overcome this problem, experimental conversion and selectivity for both hydrogenation and dehydrogenation reaction was introduced in the process simulation phase. Shi et al. [38] demonstrated that H0-DBT hydrogenation over a 5 wt% Pt/Al_2O_3 catalyst at approximately 200 °C and a pressure ranging between 30 and 40 bara achieves complete hydrogen conversion. Based on these results, the model assumes a complete hydrogen conversion within the reactor. This aligns with the experimental findings and further simplifies the process by eliminating the need for a recycle loop. The reaction product, consisting of the hydrogenated species, is cooled and then stored to be transported to the unloading terminal. The separation section downstream the reactor is simplified in this case: hydrogen conversion is quantitative and byproducts formation in the reaction phase is negligible. This evidence is recognized in literature as one of the dibenzyltoluene main advantages for its implementation as hydrogen carrier. Moreover, from the separation point of view, also, being the dibenzyltoluene heavier than toluene, more effective separation can be achieved exploiting vapor-liquid equilibrium due to the higher difference in relative volatilities with respect to lighter compounds. Also in this case, the reaction heat is used

Table 6 – Dibenzyltoluene (DBT) and perhydrodibenzyltoluene (H18-DBT) properties [22].

Property	Value	
	DBT	H18-DBT
TB [°C]	390	371
MW [kg/kmol]	272.4	290.4
SG[a] @ 60 °F [–]	1.047	0.916
ΔH_{form} [kJ/kmol]	225700	−387400

[a] SG: specific gravity.

Table 7 – Parameters to be used in equations (2) and (4) [22].

Parameter	Value	
	DBT	H18-DBT
a	1.9160	1.5069
b	−0.0075	−0.0043
c	$2.979\cdot10^{-5}$	$1.996\cdot10^{-5}$
d	$-2.905\cdot10^{-8}$	$-1.680\cdot10^{-8}$
A	1.2537113	1.1005251
B	−0.0007150	−0.0006384

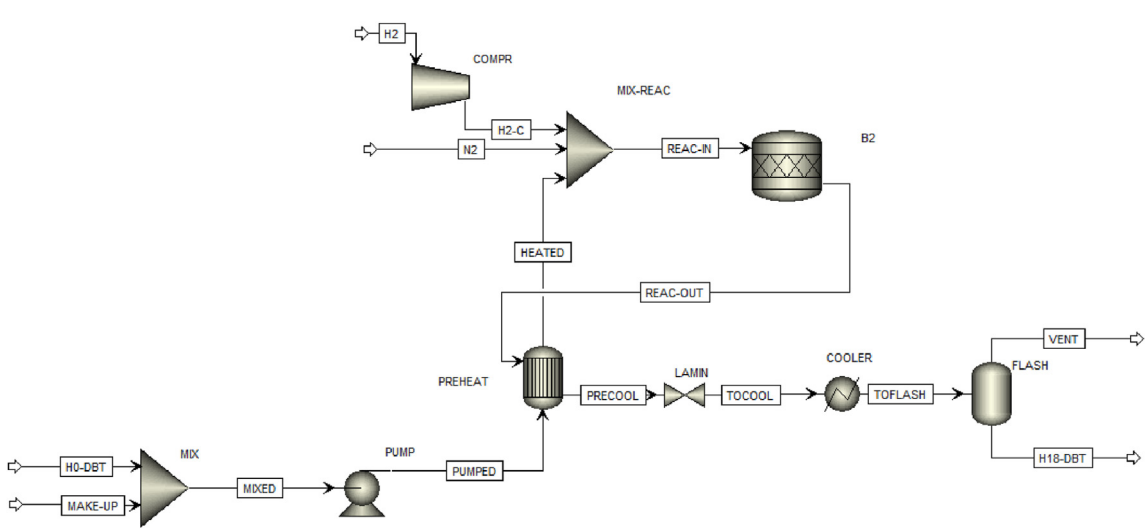

Fig. 4 – DBT hydrogenation to H18-DBT. Simulation in Aspen Plus V11®.

for steam production from boiler feed water, as reported in Fig. 3.

Inlet and outlet streams for dibenzyltoluene hydrogenation process of Fig. 4 are reported in Table 8, while Table 9 and Table 10 summarize, respectively, the thermal and power consumption of the same process.

3.2. *Dehydrogenation*

The dehydrogenation process for toluene regeneration from methylcyclohexane (reaction (6)), is reported in Fig. 5.

Table 8 – Inlet and outlet streams specifications for dibenzyltoluene hydrogenation process of Fig. 4.

stream		H2	N2	H0-DBT	MAKE-UP	H18-DBT
T	[°C]	25	25	25	25	50
P	[bara]	20	35	1.01	1.01	1.01
molar fractions						
H0-DBT		0	0	0.9597	1	0.0026
H18-DBT		0	0	0.0397	0	0.9951
H_2		1	0	0.0006	0	0
N_2		0	1	0	0	0.0023
F_{TOT}	[kmol/h]	892.91	14	103.57	0.1	103.83

Table 9 – Thermal energy consumption for dibenzyltoluene hydrogenation process of Fig. 4, together with the corresponding utility.

equipment	T_{IN} [°C]	T_{OUT} [°C]	Q [kW]	*utility*
COOLER	82.08	50	−482.3	CW
REACTOR	175.11	210	−16462.3	BFW

Table 10 – Power consumption for dibenzyltoluene hydrogenation process of Figs. 4 and 3.

equipment	P_{IN} [bara]	P_{OUT} [bara]	W [kW]
PUMP	1.01	35	47.17
COMPR	20	35	568.79
WAT-P	1.01	15	16.76

The methylcyclohexane entering the process is pumped and routed to the reaction section. The reactor, *REACTOR* in Fig. 5, whose operating conditions are 350 °C and 3 bar, is simulated as a black box with fixed conversion, being the reaction rate expression not available in literature [37].

The outlet mixture from the reactor, consisting of toluene, hydrogen and undesired byproducts (mainly benzene, produced from reaction (7)), is routed to the separation train downstream the reaction section. The outlet toluene stream (*OUT-TOL* in Fig. 5) has to be stored and routed back to the loading terminal, while hydrogen is purified by pressure swing adsorption PSA (*H2-SPLIT* in Fig. 5) to meet the required purity specifications.

$$C_7H_{14} \rightarrow C_7H_8 + 3H_2 \tag{6}$$

$$C_7H_8 + H_2 \rightarrow C_6H_6 + CH_4 \tag{7}$$

Since the dehydrogenation reaction is highly endothermic, the heat of reaction is supplied by burning part of the hydrogen produced together with the waste streams leaving the battery limits (*V* e *VENT* in Fig. 5). The combustion furnace is sketched in Fig. 6. Part of the hydrogen produced, together with the waste streams and the air needed to favour the combustion reaction, is preheated by heat exchange with the flue gas up to its auto-ignition temperature (about 500 °C). The hydrogen flow rate is selected in such a way that the heat generated by the combustion equals that necessary for the dehydrogenation reaction, while the required air flow rate is slightly higher than the stoichiometric one, to ensure complete oxidation of the inlet nitrogen. The high endothermicity of the dehydrogenation reaction has, therefore, the consequence of decreasing the amount of hydrogen leaving the battery limits.

Inlet and outlet streams specifications for methylcyclohexane dehydrogenation process of Figs. 5 and 6 are reported in Table 11, while Table 12 and Table 13 summarize, respectively, the thermal energy and power consumption of the same process.

As regards the H18-DBT dehydrogenation process to DBT (reaction (8)), its process simulation in Aspen Plus V11® is reported in Fig. 7.

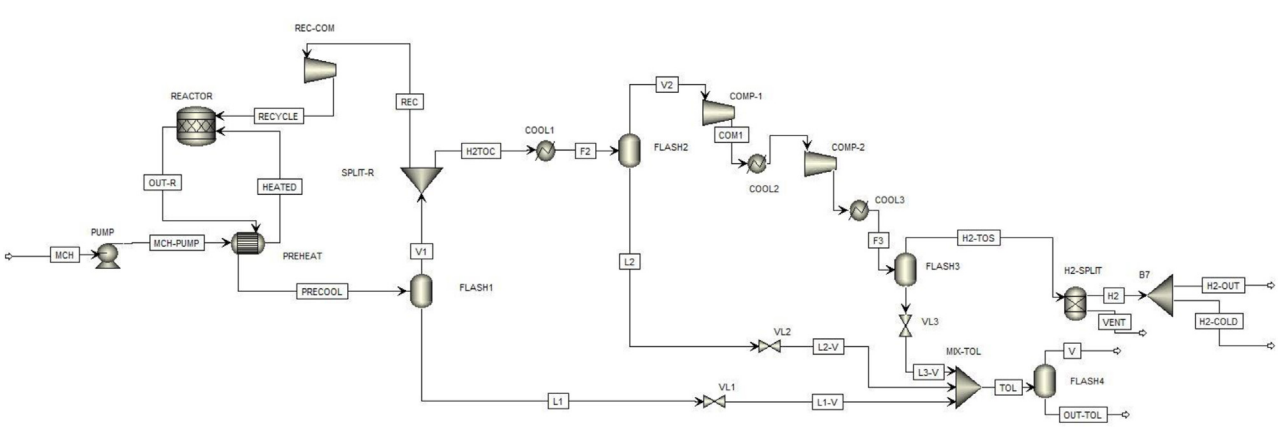

Fig. 5 – Methylcyclohexane dehydrogenation to toluene. Simulation in Aspen Plus® V11.

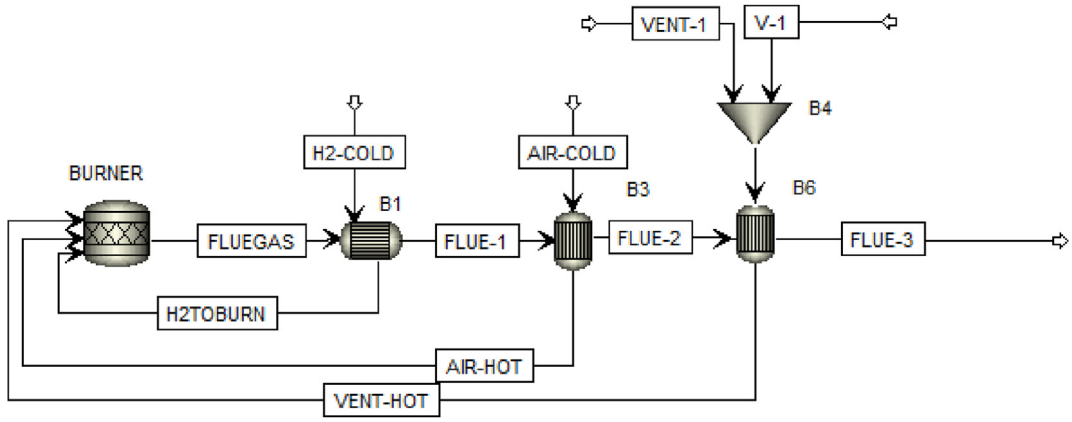

Fig. 6 – Hydrogen combustion section to cope the methylcyclohexane dehydrogenation reaction endothermicity. Simulation in Aspen Plus® V11.

Table 11 – Inlet and outlet streams specifications for methylcyclohexane dehydrogenation process of Figs. 5 and 6.

stream		MCH	H2-OUT	VENT	V	OUT-TOL	H2-COLD	AIR-COLD	FLUE-3
T	[°C]	25	35	35	25	25	35	30	179
P	[bara]	1.01	30	30	1.01	1.01	30	1	1
molar fractions									
MCH		0.9980	0	0.0710	0.0028	0.0473	0	0	0
TOL		0.0009	0	0.7119	0.0361	0.9514	0	0	0
H_2		0	1	0	0.9593	0.0004	1	0	0
BENZ		0	0	0.0049	0.0001	0.0009	0	0	0
CH_4				0.1018	0.0010	0	0	0	0
N_2		0.0010	0	0.1104	0.0007	0	0	0.7900	0.6638
O_2		0	0	0	0	0	0	0.2100	0.0005
H_2O		0	0	0	0	0	0	0	0.3196
CO_2		0	0	0	0	0	0	0	0.0161
F_{TOT}	[kmol/h]	296.17	545.75	2.75	0.71	293.77	297.64	810	964.42

Table 12 – Thermal energy consumption for methylcyclohexane dehydrogenation process of Fig. 5, together with the corresponding utility.

equipment	T_{IN} [°C]	T_{OUT} [°C]	Q [kW]	*utility*
REACTOR	210	350	20093	BFW
COOL1	100	50	−3344.6	CW
COOL2	198	80	−996.1	CW
COOL3	240	50	−1943.6	CW

Table 13 – Power consumption for methylcyclohexane dehydrogenation process of Fig. 5.

equipment	P_{IN} [bara]	P_{OUT} [bara]	W [kW]
PUMP	1.01	3	3.50
COMP-1	2.9	9.3	1237
COMP-2	9.3	30	1367.95
REC-COM	2.9	3	2.42

The H18-DBT entering the battery limits is pumped and routed to the reaction section. The reactor, *REACTOR* in Fig. 7, works at 320 °C and 1.1 bar, with fixed conversion as reported in literature [39].

$$C_{21}H_{38} \rightarrow C_{21}H_{20} + 9H_2 \quad (8)$$

The outlet product mixture, composed of DBT and hydrogen, undergoes a sequence of separations downstream the reaction section. The outlet DBT (*DBT-OUT* in Fig. 7) has to be stored and routed back to the loading terminal, while the produced hydrogen, essentially pure, is compressed and routed to the hydrogen valley.

Since the dehydrogenation reaction is highly endothermic, the heat of reaction is supplied by burning part of the hydrogen produced (H2-COLD in Fig. 7). This stream is routed to the combustion section, represented in Fig. 8. In this section, the hydrogen stream is preheated by heat exchange with the flue gas up to its auto-ignition temperature (about 500 °C) and then burned with an air flow rate slightly higher than the stoichiometric one, to ensure complete oxidation of the fuel. The hydrogen flow rate is modulated in such a way that the heat generated by the combustion is equal to that necessary for the dehydrogenation reaction.

Inlet and outlet streams specifications for methylcyclohexane dehydrogenation process of Figs. 7 and 8 are reported in Table 14, while Table 15 and Table 16 summarize, respectively, the thermal energy and power consumption of the same process.

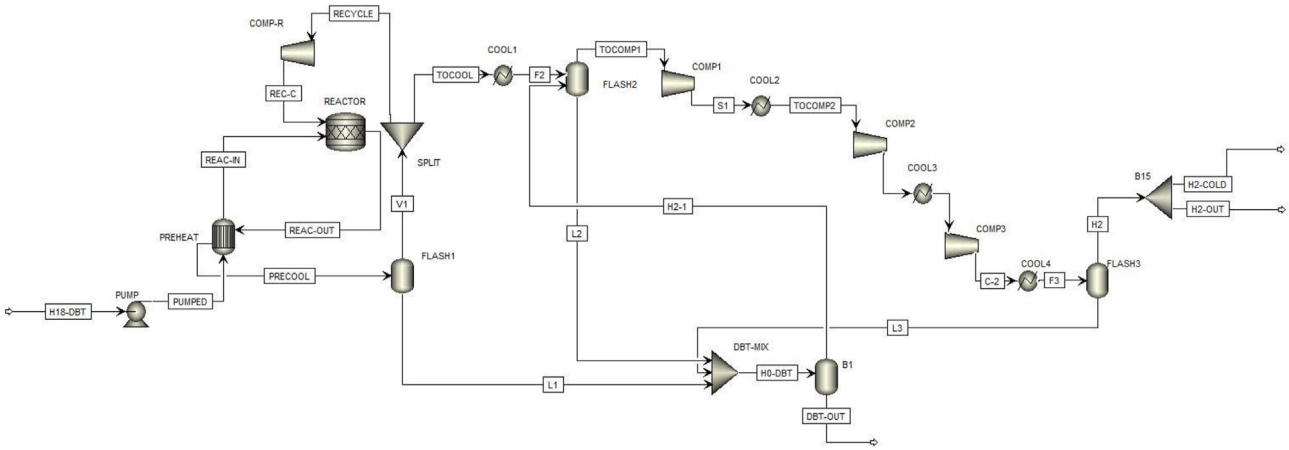

Fig. 7 – H18-DBT dehydrogenation to DBT. Simulation in Aspen Plus V11®.

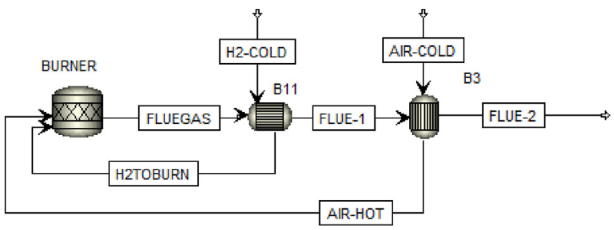

Fig. 8 – Hydrogen combustion section to cope the H18-DBT dehydrogenation reaction endothermicity. Simulation in Aspen Plus V11®.

3.3. *Ship transport*

The organic carrier is shipped from the loading to the unloading terminal via cargo tankers for oil products applications. Only one tanker of specific size has been considered. The size of the tanker is evaluated considering the number of days of production to store as in equation (9):

$$N^{\circ}_{\text{days of prod. to store}} = t_{\text{go-and-back}} + t_{\text{loading and unloading}} + t_{\text{safety margin}} \quad (9)$$

where:

- $t_{\text{go-and-back}}$ is the time needed for the go-and-back journey, calculated through equation (10), assuming a tanker speed of 16 knots (about 30 km/h).
- $t_{\text{loading and unloading}}$ is the time needed for the loading and unloading operations, assumed equal to 1 day;
- $t_{safety\ margin}$ is the safety margin time to manage possible delays, assumed equal to 2 days.

$$t_{\text{go-and-back}} = \frac{2 \cdot D}{30\text{km/h}} \quad (10)$$

Table 15 – Thermal energy consumption for H18-DBT dehydrogenation process of Fig. 7, together with the corresponding utility.

equipment	T_{IN} [°C]	T_{OUT} [°C]	Q [kW]	*utility*
REACTOR	306.8	320	19887.3	BFW
COOL1	184.8	60	−1002.3	CW
COOL2	235.9	50	−1347.0	CW
COOL3	220.8	50	−1238.5	CW
COOL4	219.9	50	−1234.2	CW

Table 16 – Power consumption for H18-DBT dehydrogenation process of Fig. 7.

equipment	P_{IN} [bara]	P_{OUT} [bara]	W [kW]
PUMP	1.01	1.1	0.14
COMP1	1.01	3.15	1275.55
COMP2	3.15	9.74	1239.62
COMP3	9.74	30	1237.91
COMP-R	1.01	1.1	5.75

Table 14 – Inlet and outlet streams specifications for H18-DBT dehydrogenation process of Figs. 7 and 8.

stream		H18-DBT	H2-OUT	DBT-OUT	H2-COLD	AIR-COLD	FLUE-2
T	[°C]	25	50.73	35	30	30	171.79
P	[bara]	1.01	30	1.01	30	1.01	1.01
molar fractions							
H0-DBT		0.0026	0	0.9597	0	0	0
H18-DBT		0.9951	0	0.0397	0	0	0
H_2		0	0.9997	0.0006	0.9997	0	0
N_2		0.0023	0.0003	0	0.0003	0.7900	0.6592
O_2		0	0	0	0	0.2100	0.0097
H_2O		0	0	0	0	0	0.3311
F_{TOT}	[kmol/h]	103.83	575.65	103.57	317.48	800	958.74

Equation (11) allows the evaluation of the tanker size, knowing the carrier density, $\rho_{species}$, and the daily productivity, *Prod*, assuming the utilization of the 98% of the tanker total volume.

$$V_{vessel}[m^3] = \frac{Prod.\ [kg/d] \cdot N^{\circ}_{days\ of\ prod.\ to\ store}[d]}{\rho_{species}[kg/m^3] \cdot (0.98)} \quad (11)$$

3.4. Storage

Storage of the hydrogenated and dehydrogenated carrier is needed at both loading and unloading terminals. The storage tanks volume is evaluated as in equation (12), where an extra capacity of 10% is assumed to take into account for possible delays.

$$V_{tank}[m^3] = (1+0.1) \cdot V_{vessel}[m^3] \quad (12)$$

3.5. Road transport

The organic carrier is routed from the arriving terminal to the hydrogen valley via road transport. The number of trucks needed, n_{trucks}, is evaluated from equation (13), considering 2 journeys/day for each camion, the volume to be distributed $V_{unloaded\ from\ the\ vessel}$ calculated from equation (14) and V_{truck} calculated for each carrier, basing on the carrier density and considering that each truck can transport about 28.5 ton of organic compound [40,41].

$$n_{trucks} = \frac{V_{unloaded\ from\ the\ vessel}}{V_{truck} \cdot N^{\circ}_{days\ of\ prod.\ to\ store} \cdot 2} \quad (13)$$

$$V_{unloaded\ from\ the\ vessel} = \frac{Prod.\ [kg/d] \cdot N^{\circ}_{days\ of\ prod.\ to\ store}}{\rho_{species}[kg/m^3]} \quad (14)$$

4. Economic assessment

To perform the economic assessment of harbour-to-harbour hydrogen transport through LOHC, the methodology described in the following has been applied. The economic assessment of the cost drivers of the value chains (hydrogenation and dehydrogenation), has been performed according to the Turton methodology [42], detailed in section S.1, starting from the process simulations described in section 3. Level 3 of the Turton methodology for cost estimation, applied in this work, is reported to have an accuracy level of ±25%, which is assumed acceptable for process engineering pre-feasibility studies.

Utilities cost (C_{UT}) and raw materials cost (C_{RM}) are evaluated referring to Table 17 and Table 18, where two different scenarios are proposed: the "present" one, corresponding to the 2022 scenario and the "future" one, considering a significant cost reduction within 4–5 years, to take into account the huge inflation of 2022.

The following assumptions have been considered in the economic assessment of the overall value chain, after having proved for each of them that they do not significant affect the quality of the results:

- catalysts cost neglected, both initial and make up;
- spare units neglected;

Table 17 – Cost of utilities according to the "present" and "future" scenarios.

		"present"	"future"
CO_2 emissions [43]	€/t	90	105
Electric energy	€/MWh	500	220
Natural gas	€/t	2550	650
Natural gas	€/MWh	180	45
Cooling water (30–40 °C)	€/t	0.015	0.015
Boiler feed water	€/t	1.15	1.20
LP steam	€/t	100	40
MP steam (200 °C, 15 bara)	€/t	130	50
IFO 380 1%S	€/t	580	450
Diesel	€/l	1.8155	1.8155

Table 18 – Cost of raw materials according to the "present" and "future" scenarios.

		"present"	"future"
Toluene	€/t	1300	850
Dibenzyltoluene	€/t	5000	3000
Nitrogen	€/Nm^3	0.20	0.15

- harbour infrastructures referred to all the loading and unloading facilities (pipelines, jetty, flares) neglected at both loading and unloading terminals;
- only direct CO_2 emissions considered.

Along with cost drivers, also ship transport, storage and distribution costs have been accounted for, based on literature case-studies. Their economic assessment is detailed in section S.1.

Once the fixed and operating costs for each stage of the value chain in Fig. 1 have been calculated, the levelized cost of hydrogen transport (LCOHT) [€/kg$_{H2}$] is calculated according to equation (31):

$$LCOHT = \frac{\sum_{t=0}^{N-1} \frac{CAPEX_t + OPEX_t}{(1+WACC)^t}}{\sum_{t=0}^{N-1} \frac{P_{H_2,out}}{(1+WACC)^t}} \quad (15)$$

where:

- $P_{H2,out}$ is the annual amount of hydrogen delivered;
- *WACC* is the weighted average cost of capital;
- *t* is the considered year, with $t = 0$ is the 2022 year and *N-1* is the end year;
- $CAPEX_t$ and $OPEX_t$ are the capital and operating expenses at time *t*.

The financial assumptions introduced in the *LCOHT* are listed in Table 19.

5. Results and discussion

Results of the economic evaluations for both the organic carriers, *i.e.*, toluene and dibenzyltoluene, are reported in the following and refer to the methodology described in section 4 and S.1. In both cases, the fixed costs of the hydrogenation/

Table 19 – Financial assumptions for LCOHT evaluation.

Item	Value
WACC	5%
Project lifetime	25 y
Construction period	3 y (CAPEX breakdown: 40%, 30%, 30%)
Decommissioning cost	5% CAPEX [44]
Exchange rate (2022)	0.951 €/US-$ [45]
Plant availability	8000 h/y

dehydrogenation reactor have been evaluated as those of a shell and tube exchanger with the same duty, as it is not possible, at the current stage of the analysis, to size the equipment more accurately. Furthermore, in the carried out economic evaluations, the fixed cost of the initial LOHC loading (toluene and dibenzyltoluene) has been considered, too. The volume of this initial loading is assumed to be equal to that of three storage tanks, *i.e.* the amount of carrier needed for H_2 distribution start-up.

Also, it is worth noticing that the maturity level of the toluene technology is higher than the dibenzyltoluene one and this aspect has to be considered when the two alternatives are compared.

Fig. 9 shows the block flow diagram BFD of the whole value chain for both toluene and dibenzyltoluene. Material balances for each stage of the value chain are also figured out, together with the utilities needed for each stage.

Starting from the process simulations detailed in the technical assessment, the fixed costs and operating costs for the hydrogenation and dehydrogenation processes have been estimated.

For the hydrogenation process, the fixed costs of both carriers are reported in Table 20, where it is shown that, in the case of toluene hydrogenation, more than half of the fixed costs are due to the non-converted hydrogen recycle compressor. This unit is necessary for the recompression to the reaction pressure of the hydrogen expanded to ambient pressure in the separation section. As for the dibenzyltoluene hydrogenation, Table 20 shows that about 1/3 of the fixed costs is due to the compressor of the inlet hydrogen. Fixed costs for DBT hydrogenation are lower than the costs for toluene hydrogenation. This evidence, in line with the literature, is due to the simplified separation section downstream the reaction one.

Table 21 summarizes the operating costs of the hydrogenation process, for both toluene and dibenzyltoluene. Among the utilities, electricity is the main cost item. The steam

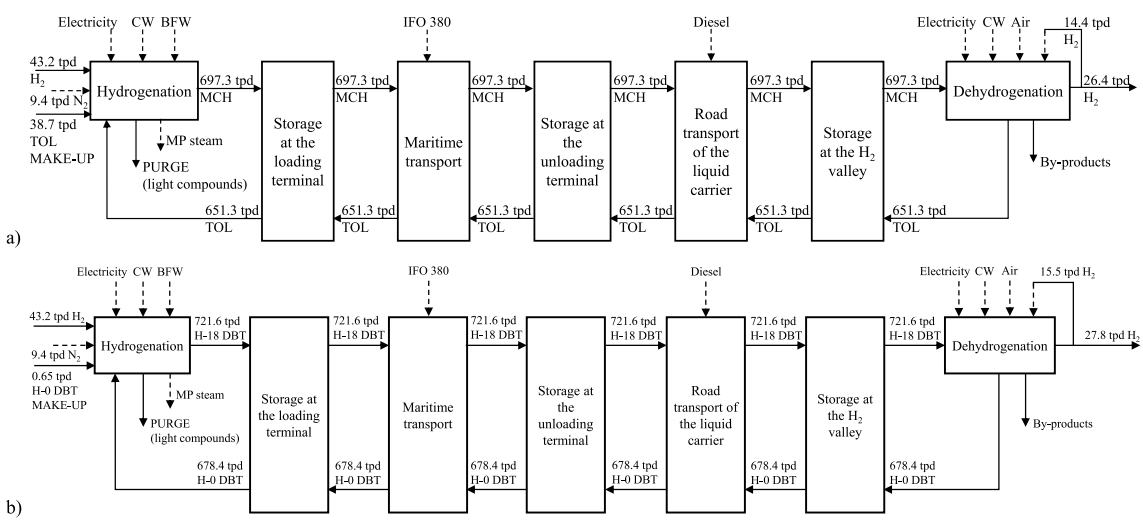

Fig. 9 – Value chain block flow diagram (BFD) for: a) toluene; b) dibenzyltoluene.

Table 20 – CAPEX [M€] and breakdown of C_{BM} for the carrier hydrogenation process.

	equipment	toluene cost [M€]	dibenzyltoluene cost [M€]	toluene	dibenzyltoluene
C_{BM}	heat exchangers	0.92	1.08	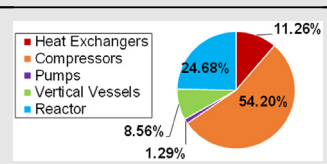	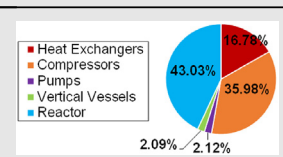
	compressors	4.42	2.32		
	pumps	0.11	0.14		
	vertical vessels	0.70	0.13		
	reactor	2.01	2.77		
C_{TM}		9.63	7.60		
CAPEX		11.17	8.98		

Table 21 – Utilities consumption and corresponding cost (C_{UT}) [M€/y] for the hydrogenation process.

utility	toluene			dibenzyltoluene		
	W [kW]		C_{UT} [M€/y]	W [kW]		C_{UT} [M€/y]
electricity	1459		5.84	633		2.53
utility	**Q [kW]**	***flow rate* [t/y]**		**Q [kW]**	***flow rate* [t/y]**	
CW	3379	2324558	0.03	482	331812	0.005
BFW		152000	0.17	–		
MP steam		152000	−19.76	–		

Table 22 – Raw materials consumption and corresponding cost (C_{RM}) [M€/y] for the hydrogenation process.

raw material	toluene		dibenzyltoluene	
	flow rate [t/y]	C_{RM} [M€/y]	*flow rate* [t/y]	C_{RM} [M€/y]
make-up	12900	16.77	217.91	1.09
N_2	3138	0.50	3138	0.50

Table 23 – OPEX [M€/y] for the hydrogenation process.

	toluene	dibenzyltoluene
	Cost [M€/y]	Cost [M€/y]
C_{UT}	−13.89	2.54
C_{RM}	17.44	1.79
C_{OL}	0.60	0.60
other DMC	1.23	1.09
FMC	1.18	1.04
GE	2.00	2.11
OPEX	8.57	9.17

produced has been considered as a revenue only for toluene and not for dibenzyltoluene. This is in order to make the comparison between the two carriers as fair as possible, taking into account the different maturity level of the processes and, thus, the more simplified simulation for dibenzyltoluene, which entails the evaluation of lower costs. Among the raw materials necessary for the toluene hydrogenation section, the make-up toluene and the nitrogen entering the reactor as a thermal diluent were considered. Most of the expenditure for raw materials is due to the toluene make-up, necessary to compensate for the losses in the separation sections downstream of the reactor, as from Table 22. On the other hand, the make-up stream is very limited in the case of dibenzyltoluene hydrogenation. Table 23 summarizes the OPEX of the hydrogenation process for both toluene and dibenzyltoluene.

Table 24 reports the dehydrogenation process fixed costs for both toluene and dibenzyltoluene. In both cases, most of the fixed costs are due to the compressors necessary for H_2 compression up to 30 bar. Table 25, on the other hand, provides the utility costs of the dehydrogenation process.

As for the operating costs, electricity to power pumps and compressors is the main cost item (Table 26). No raw materials are needed, since methylcyclohexane and perhydrodibenzyltoluene come from the hydrogenation step. In the carried-out evaluations, the cost associated with the CO_2 emissions downstream of the combustion reaction was neglected (the value is negligible, as shown in the material balance of Table 11).

In addition to the cost drivers, to complete the technical-economic analysis of the value chain of Fig. 1, the cost associated with ship transport, storage of the hydrogenated/dehydrogenated compound and road transport of the carriers were estimated.

The costs of the storage tanks, ship transport and road transport of the organic carrier are reported in Table 27, Table 28, Table 29, respectively.

Results for the whole value chain economic assessment are reported in Fig. 10 for both toluene and dibenzyltoluene and considering the present and future scenarios. The dehydrogenation stage is the cost driver of the whole value chain and is related to the huge hydrogenation enthalpy of the homocyclic compounds considered. The hydrogenation stage is also one of main cost elements in the economic assessment. Its process intensification, to allow an optimized management

Table 24 – CAPEX [M€] and breakdown of C_{BM} for the dehydrogenation process.

	equipment	toluene	dibenzyltoluene	toluene	dibenzyltoluene
		cost [M€]	cost [M€]		
C_{BM}	heat exchangers	2.24	2.21	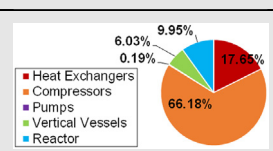	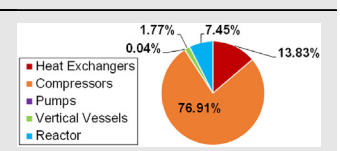
	compressors	8.41	12.29		
	pumps	0.02	0.01		
	vertical vessels	0.77	0.28		
	reactor	1.27	1.19		
C_{TM}		15.00	18.86		
CAPEX		17.21	21.40		

Table 25 – Utilities consumption and corresponding cost (C_{UT}) [M€/y] for the dehydrogenation process.

utility	toluene			dibenzyltoluene		
	W [kW]		C_{UT} [M€/y]	W [kW]		C_{UT} [M€/y]
electricity	2611		10.44	3759		15.04
utility	**Q [kW]**	***flow rate* [t/y]**		**Q [kW]**	***flow rate* [t/y]**	
CW	6284	4323625	0.07	4822	3317587	0.05

Table 26 – OPEX [M€/y] for the dehydrogenation process.

	toluene	dibenzyltoluene
	cost [M€/y]	*cost* [M€/y]
C_{UT}	10.51	15.09
C_{RM}	0.00	0.00
C_{OL}	0.60	0.60
other DMC	1.95	2.45
FMC	1.60	1.88
GE	4.23	5.70
OPEX	18.88	25.71

Table 27 – Storage tanks fixed costs.

stored compound	V_{tank} [m^3]	CAPEX [M€]
MCH	10300	13.65
Toluene	8500	12.16
H-18 DBT	7900	11.64
H-0 DBT	8400	12.08

Table 28 – CAPEX [M€] and OPEX [M€/y] for the hydrogen carrier ship transport.

Carrier	V_{vessel} [m^3]	CAPEX [M€]	OPEX [M€/y]
toluene	9300	9.29	3.77
dibenzyltoluene	7600	8.92	3.32

Table 29 – CAPEX [M€] and OPEX [M€/y] for the hydrogen carrier road transport.

Carrier	n_{trucks}	CAPEX [M€]	OPEX [M€/y]
toluene	13	4.40	2.76
dibenzyltoluene	13	4.40	3.85

of the reaction heat, can be a focus point for future research in order to reduce the overall technology costs. From the hydrogenation/dehydrogenation point of view, the identification of species with a low hydrogenation enthalpy can have a significant impact on the whole process economics. Organic heterocyclic compounds usually show a lower hydrogenation enthalpy than the homocyclic ones. However, a higher raw material cost is associated with the former, while the latter are usually less expensive. As a result, the choice of the most suitable organic carrier is a trade-off between the hydrogenation enthalpy and the raw material cost. The raw material cost, also, directly impacts the value chain economics, leading to a higher expenditure associated to the carrier initial loading, as shown in Fig. 10. In the present scenario, toluene is

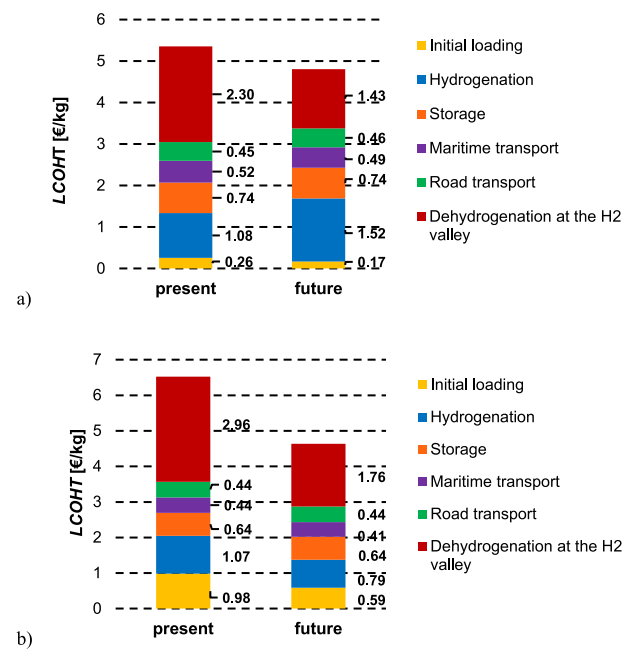

Fig. 10 – Results of the economic assessment for: a) toluene and b) dibenzyltoluene.

the most cost-effective alternative, due to the very high cost per kg of dibenzyltoluene. In the future scenario, the reduction in the cost of dibenzyltoluene equals the costs of transporting hydrogen of the two carriers for the distance of 2500 km considered in this analysis. Longer distances increase the impact of the initial organic carrier loading; thus, the most viable alternative has to be evaluated case by case.

6. Conclusion

The energy transition from fossil fuels to renewables imposes the rethinking of the whole energy system. In view of achieving the decarbonization target, liquid organic hydrogen carriers seem a promising alternative for hydrogen transport at mild operating conditions, having the advantage of easily handling and adaptability to the existing infrastructures. However, for their implementation to the industrial level, two aspects have to be considered: on the one hand, the highly endothermicity of the hydrogenation reaction and, on the other hand, the cost of initial loading of the hydrogen carrier.

More complex molecules than toluene and dibenzyltoluene, as the heterocyclic compounds, can be effective in reducing the dehydrogenation costs but can be associated with a higher raw material cost, making the initial loading cost increase. For this reason, the choice of the most

advantageous alternative is a trade-off between these two aspects and has to be assessed case-by-case depending on the value chain basis of design.

Declaration of competing interest

The authors declare that they have no known competing financial interests or personal relationships that could have appeared to influence the work reported in this paper.

REFERENCES

[1] GPSA engineering data book. 14th ed. ed.
[2] Global hydrogen trade to meet the 1.5°C climate goal: Part II – technology review of hydrogen carriers. International Renewable Energy Agency; 2022.
[3] The Future of Hydrogen. Seizing today's opportunities. Report prepared by the IEA for the G20. Japan: International Energy Agency; 2019.
[4] Joint Research C, Institute for E, Transport, Rose K, Nelson R, Hamje H, et al. Well-to-wheels analysis of future automotive fuels and powertrains in the European context : tank-to-wheels report (TTW), version 4a, April 2014. Publications Office; 2014.
[5] Ratnakar RR, Gupta N, Zhang K, van Doorne C, Fesmire J, Dindoruk B, et al. Hydrogen supply chain and challenges in large-scale LH2 storage and transportation. Int J Hydrogen Energy 2021;46:24149–68.
[6] Viswanathan B. Chapter 9 - hydrogen as an energy carrier. In: Viswanathan B, editor. Energy sources. Amsterdam: Elsevier; 2017. p. 161–83.
[7] Demir ME, Dincer I. Cost assessment and evaluation of various hydrogen delivery scenarios. Int J Hydrogen Energy 2018;43:10420–30.
[8] Ohlig K, Decker L. The latest developments and outlook for hydrogen liquefaction technology. AIP Conf Proc 2014;1573:1311–7.
[9] Cardella U, Decker L, Klein H. Roadmap to economically viable hydrogen liquefaction. Int J Hydrogen Energy 2017;42:13329–38.
[10] Ishaq H, Dincer I, Crawford C. A review on hydrogen production and utilization: challenges and opportunities. Int J Hydrogen Energy 2022;47:26238–64.
[11] Ecuity STFC, Engie Siemens. Ammonia to green hydrogen Project. Ecuity, STFC, Engie, Siemens: Feasibility Study; 2020.
[12] Cheddie D. Ammonia as a hydrogen source for fuel Cells: a review. 2012.
[13] Spatolisano E, Pellegrini LA. Haber-Bosch process intensification: a first step towards small-scale distributed ammonia production. Chem Eng Res Des 2023. Article in press.
[14] Restelli F, Spatolisano E, Pellegrini LA, de Angelis AR, Cattaneo S, Roccaro E. Detailed techno-economic assessment of ammonia as green H2 carrier. Int J Hydrogen Energy 2023.
[15] Díaz E, Rapado-Gallego P, Ordóñez S. Systematic evaluation of physicochemical properties for the selection of alternative liquid organic hydrogen carriers. J Energy Storage 2023;59:106511.
[16] Rao PC, Yoon M. Potential liquid-organic hydrogen carrier (LOHC) systems: a review on recent Progress. Energies; 2020.
[17] Aakko-Saksa PA-O, Vehkamäki M, Kemell MA-O, Keskiväli LA-O, Simell P, Reinikainen MA-O, et al. Hydrogen release from liquid organic hydrogen carriers catalysed by platinum on rutile-anatase structured titania.
[18] He T, Pei Q, Chen P. Liquid organic hydrogen carriers. J Energy Chem 2015;24:587–94.
[19] Geburtig D, Preuster P, Bösmann A, Müller K, Wasserscheid P. Chemical utilization of hydrogen from fluctuating energy sources – Catalytic transfer hydrogenation from charged Liquid Organic Hydrogen Carrier systems. Int J Hydrogen Energy 2016;41:1010–7.
[20] Okada Y, Sasaki E, Watanabe E, Hyodo S, Nishijima H. Development of dehydrogenation catalyst for hydrogen generation in organic chemical hydride method. Int J Hydrogen Energy 2006;31:1348–56.
[21] Zhu Q-L, Xu Q. Liquid organic and inorganic chemical hydrides for high-capacity hydrogen storage. Energy Environ Sci 2015;8:478–512.
[22] Müller K, Stark K, Emel'yanenko VN, Varfolomeev MA, Zaitsau DH, Shoifet E, et al. Liquid organic hydrogen carriers: Thermophysical and Thermochemical studies of Benzyl- and Dibenzyl-toluene Derivatives. Ind Eng Chem Res 2015;54:7967–76.
[23] https://www.chiyodacorp.com/en/service/spera-hydrogen/. [Accessed 28 March 2023].
[24] Gupta AK, Bishnoi PR, Kalogerakis N. Simultaneous multiphase isothermal/isenthalpic flash and stability calculations for reacting/non-reacting systems. Gas Separ Purif 1990;4:215–22.
[25] Brückner N, Obesser K, Bösmann A, Teichmann D, Arlt W, Dungs J, et al. Evaluation of industrially applied heat-transfer Fluids as liquid organic hydrogen carrier systems. ChemSusChem 2014;7:229–35.
[26] Preuster P, Papp C, Wasserscheid P. Liquid organic hydrogen carriers (LOHCs): toward a hydrogen-free hydrogen economy. Accounts of Chemical Research 2017;50:74–85.
[27] Hurskainen M, Ihonen J. Techno-economic feasibility of road transport of hydrogen using liquid organic hydrogen carriers. Int J Hydrogen Energy 2020;45:32098–112.
[28] Niermann M, Timmerberg S, Drünert S, Kaltschmitt M. Liquid Organic Hydrogen Carriers and alternatives for international transport of renewable hydrogen. Renew Sustain Energy Rev 2021;135:110171.
[29] Raab M, Maier S, Dietrich R-U. Comparative techno-economic assessment of a large-scale hydrogen transport via liquid transport media. Int J Hydrogen Energy 2021;46:11956–68.
[30] Reuß M, Grube T, Robinius M, Preuster P, Wasserscheid P, Stolten D. Seasonal storage and alternative carriers: a flexible hydrogen supply chain model. Appl Energy 2017;200:290–302.
[31] Papadias DD, Peng J-K, Ahluwalia RK. Hydrogen carriers: production, transmission, decomposition, and storage. Int J Hydrogen Energy 2021;46:24169–89.
[32] Noh H, Kang K, Seo Y. Environmental and energy efficiency assessments of offshore hydrogen supply chains utilizing compressed gaseous hydrogen, liquefied hydrogen, liquid organic hydrogen carriers and ammonia. Int J Hydrogen Energy 2023;48:7515–32.
[33] Hydrogen transportation| the key to unlocking the clean hydrogen economy. Roland Berger; 2021.
[34] Chodorowska N, Farhadi M. H2 value chain comparing different transport vectors. In: GPA Europe Virtual Conference; 25 May 2021.
[35] Aspen Plus®. United States: Burlington (MA); 2019.

[36] Hamayun MH, Hussain M, Maafa IM, Aslam R. Integration of hydrogenation and dehydrogenation system for hydrogen storage and electricity generation – simulation study. Int J Hydrogen Energy 2019;44:20213–22.
[37] Imagawa K, Kawai H, Shiraga M, Nakajima Y. Aromatic compound hydrogenation system and hydrogen storage/transport system equipped with same, and aromatic compound hydrogenation method. 2015. p. WO2015115101A1.
[38] Shi L, Qi S, Qu J, Che T, Yi C, Yang B. Integration of hydrogenation and dehydrogenation based on dibenzyltoluene as liquid organic hydrogen energy carrier. Int J Hydrogen Energy 2019;44:5345–54.
[39] Asif F, Hamayun MH, Hussain M, Hussain A, Maafa IM, Park Y-K. Performance analysis of the perhydro-Dibenzyltoluene dehydrogenation system—a simulation study. Sustainability; 2021.
[40] Teichmann D, Arlt W, Wasserscheid P. Liquid Organic Hydrogen Carriers as an efficient vector for the transport and storage of renewable energy. Int J Hydrogen Energy 2012;37:18118–32.
[41] Reuß M, Grube T, Robinius M, Stolten D. A hydrogen supply chain with spatial resolution: Comparative analysis of infrastructure technologies in Germany. Appl Energy 2019;247:438–53.
[42] Turton R. Analysis, synthesis, and design of chemical processes. Prentice Hall; 2012.
[43] https://www.esma.europa.eu/sites/default/files/library/esma70-445-38_final_report_on_emission_allowances_and_associated_derivatives.pdf#page8. [Accessed 28 March 2023].
[44] Projected costs of generating electricity-2020 edition. 2020.
[45] https://www.ecb.europa.eu/stats/policy_and_exchange_rates/euro_reference_exchange_rates/html/eurofxref-graph-usd.en.html. [Accessed 24 March 2023].